WT32

DATA SHEET

Tuesday, 25 August 2009

Version 1.5

bluegiga

Copyright © 2000-2009 Bluegiga Technologies

All rights reserved.

Bluegiga Technologies assumes no responsibility for any errors which may appear in this manual. Furthermore, Bluegiga Technologies reserves the right to alter the hardware, software, and/or specifications detailed here at any time without notice and does not make any commitment to update the information contained here. Bluegiga's products are not authorized for use as critical components in life support devices or systems.

The WRAP, Bluegiga Access Server, Access Point and iWRAP are registered trademarks of Bluegiga Technologies.

The *Bluetooth* trademark is owned by the Bluetooth SIG Inc., USA and is licensed to Bluegiga Technologies. All other trademarks listed herein are owned by their respective owners.

VERSION HISTORY

Version	Comment
0.992	New images added
0.991	Missing pin added to recommended land pattern design
0.99	Microphone biasing recommendation fixed. Voltage regulator enable pin description added. Some small fixes. Layout guidelines for the audio traces added.
0.98	Version history added. Microphone biasing recommendations specified. Package information added. Pinout AIO0 and AIO1 fixed.
0.97	VREG_ENA pin added to the production version of the module Layout recommendations added
0.98	Fixed cross references
1.0	Soldering recommendations added. Layout guide fixed. Details at VREG_ENA. Operating temperature range fixed.
1.1	Bluetooth and FCC qualification IDs added
1.2	Figure 18 fixed. Recommendation for external ESD protection removed.
1.3	Changed VREG_ANA to VREG_ENA
1.4	Radiocharacteristics updated
1.5	List of pretested antennas added

TABLE OF CONTENTS

1 Ordering Information 7
2 Block Diagram and Descriptions 8
3 Electrical Characteristics 10
3.1 Radio Characteristics 15
3.1.1 Radiation Pattern (WT32EK) 15
4 WT32 Pin Description 16
4.1 Device Terminal Functions 17
5 Power Control 22
5.1 Power Supply Configuration 22
5.2 Voltage Regulator Enable Pin 22
5.3 Battery Charger 23
5.4 RESET 24
6 Serial Interfaces 25
6.1 UART Interface 25
6.1.1 UART Configuration While RESET is Active 26
6.1.2 UART Bypass Mode 26
6.2 USB Interface 28
6.2.1 USB Pull-Up Resistor 28
6.2.2 Self Powered Mode 28
6.2.3 Bus Powered Mode 29
6.2.4 Suspend Current 29
6.2.5 Detach and Wake-Up Signaling 29
6.2.6 USB Driver 30
6.2.7 USB 1.1 Compliance 30
6.2.8 USB 2.0 Compatibility 30
6.3 SPI Interface 31
7 Audio Interfaces 32
7.1 Audio Interface 32
7.1.1 Audio Input and Output 32
7.2 Stereo Audio CODEC Interface 33
7.2.1 ADC 34
7.2.2 DAC 35
7.2.3 IEC 60958 Interface 36
7.2.4 Microphone Input 37
7.2.5 Line Input 39
7.2.6 Output Stage 39
7.3 Digital Audio Interface (I2S) 41

7.4 PCM Interface 44
7.4.1 PCM Interface Master/Slave 44
7.4.2 Long Frame Sync 45
7.4.3 Short Frame Sync 45
7.4.4 Multi Slot Operation 46
7.4.5 GCI Interface 46
7.4.6 Slots and Sample Formats 46
7.4.7 Additional Features 47
7.4.8 PCM CLK and SYNC Generation 47
7.4.9 PCM Configuration 48
8 I/O Parallel Ports 49
9 Software Stacks 50
9.1 iWRAP Stack 50
9.2 RFCOMM Stack 51
9.3 VM Stack 52
10 Enhanced Data Rate 54
10.1 Enhanced Data Rate Baseband 54
10.2 Enhanced Data Rate ∏/4 DQPSK 54
10.3 8DQPSK 55
11 Layout and Soldering Considerations 56
11.1 Soldering Recommendations 56
11.2 Layout Guidelines 56
11.2.1 Audio Layout 56
11.2.2 Antenna Design 56
12 WT32 Physical Dimensions 59
13 Package 60
14 Certifications 62
14.1 Bluetooth 62
14.2 FCC 63
14.3 CE 64
14.4 Industry Canada (IC) 64
14.5 Pretested antennas 65
15 RoHS Statement with a List of Banned Materials 67
16 Contact Information 68

DESCRIPTION:

WT32 is the latest generation of Bluetooth modules. It provides highest level of integration with integrated 2.4GHz radio, DSP, battery charger, stereo codec, and antenna ready to hit mono and stereo audio applications. WT32 is also ready to support the latest Bluetooth 2.1 standard.

The embedded DSP core allows enhancement of the product with features such as advanced audio decoding (MP3, AAC, AAC+), echo cancellation, noise reduction, and data manipulation.

Bluegiga's flexible iWRAP firmware enables device manufacturers to easily add wireless, secure, and standard-based Bluetooth connectivity into new or existing applications with very limited development and manufacturing effort. WT32 is Bluetooth End Product, CE and FCC certified meaning that OEMs do not need to apply any additional certifications.

APPLICATIONS:

- High quality wireless stereo headsets
- Wireless mono headsets
- Wireless speakers
- USB multimedia dongles
- MP3 players
- VoIP handsets
- Hands-free car kits

FEATURES:

- Plug n' Play Bluetooth Solution for Mono and Stereo Audio Solutions
- Integrated DSP, Stereo Codec, and Battery Charger
- Integrated Antenna and W.FL Connector
- Bluetooth 2.0 Compliant and Bluetooth 2.1 Ready
- Bluetooth End Product, CE and FCC Qualified
- Class 2 - Range up to 30 Meters
- Industrial Temperature Range from -40C to +85C
- Low Power Consumption
- iWRAP™ Firmware for Controlling Connections and Configuring Settings
- Supported Bluetooth Profiles: A2DP, AVRCP, HFP, HFP-AG, SPP, OPP and HID



1 Ordering Information

WT32-A-AI

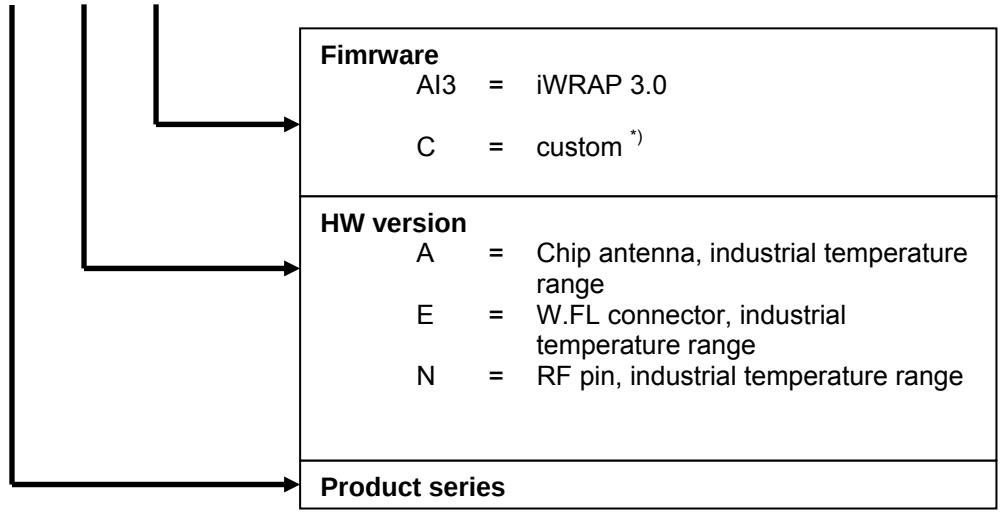

**) Custom firmware refers to any standard firmware with custom parameters (like UART baud rate), custom firmware developed by customer, or custom firmware developed by Bluegiga for the customer. To order custom firmware, you must have a properly filled Custom Firmware Order Form and a unique ordering code issued by Bluegiga.*

Contact support@bluegiga.com for more information.

2 Block Diagram and Descriptions

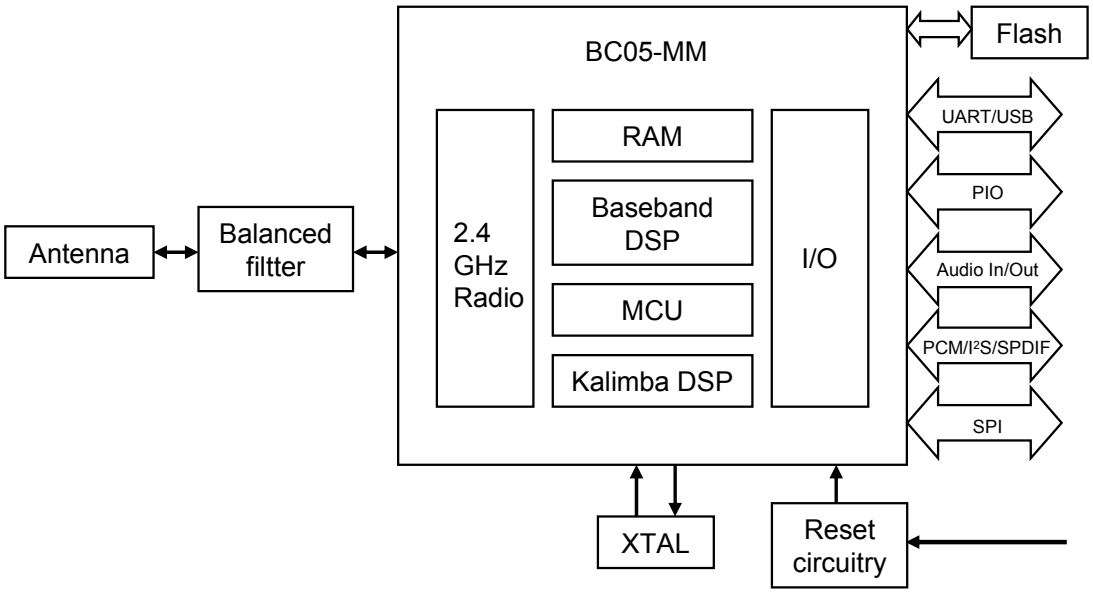

Figure 1: Block diagram of WT32

BC05-MM

The BlueCore05-MM is a single-chip radio and baseband IC for Bluetooth 2.4GHz systems. It provides a fully compliant Bluetooth system to v2.0+EDR of the specification for data and voice.

BlueCore05-MM contains the Kalimba DSP co-processor with double the MIPS of BlueCore03-MM, supporting enhanced audio applications. BlueCore05-MM integrates a 16-bit stereo codec and it has a fully differential audio interface with a low noise microphone bias.

Crystal

The crystal oscillates at 26MHz.

Flash

Flash memory is used for storing the Bluetooth protocol stack and Virtual Machine applications. It can also be used as an optional external RAM for memory-intensive applications.

Balanced Filter

Combined balun and filter changes the balanced input/output signal of the module to unbalanced signal of the antenna. The filter is a band pass filter (ISM band).

Antenna

WT32 uses ceramic chip antenna with high dielectric constant, which makes the antenna very insensitive to surrounding environment and thus gives high design freedom around the antenna.

USB

The USB interface is a full speed Universal Serial Bus (USB) interface for communicating with other compatible digital devices. WT32 acts as a USB peripheral, responding to requests from a Master host controller such as a Personal Computer (PC).

Synchronous Serial Interface

This interface is a synchronous serial port interface (SPI) for interfacing with other digital devices. The SPI port can be used for system debugging. It can also be used for programming the Flash memory.

UART

This interface is a standard Universal Asynchronous Receiver Transmitter (UART) interface for communicating with other serial devices.

PCM / I^2S / SPDIF Interface

This interface is a bi-directional serial programmable audio interface supporting PCM, I2S and SPDIF formats.

Audio Interface

The audio interface of WT32 has fully differential inputs and outputs and a microphone bias output. A high-quality stereo audio Bluetooth application can be implemented with minimum amount of external components.

Programmable I/O

WT32 has a total of 10 digital programmable I/O terminals. These are controlled by the firmware running on the device.

Reset

WT32 has a reset circuitry that is used to reset the module in the startup to ensure proper operation of the flash memory. Alternatively, the reset can be externally driven by using a WT32 reset pin.

802.11 Coexistence Interface

Dedicated hardware is provided to implement a variety of coexistence schemes. Channel skipping AFH (Adaptive Frequency Hopping), priority signaling, channel signaling, and host passing of channel instructions are all supported. The features are configured in firmware. Since the details of some methods are proprietary (e.g. Intel WCS), please contact Bluegiga Technologies for details.

3 Electrical Characteristics

Absolute maximum ratings

	Min	Max	Unit
Storage temperature	-40	85	°C
Operating temperature	-30	85	°C
VDD_IO	-0.4	3.6	V
VDD_BAT	-0.4	4.4	V
VDD_CHG	-0.4	6.5	V
Terminal voltages	-0.4	Vdd + 0,4	V
Output current from PIOs		TBD	mA

The module should not continuously run under these conditions. Exposure to absolute maximum rating conditions for extended periods of time may affect reliability and cause permanent damage to the device.

Table 1: Absolute maximum ratings

Recommended operating conditions

	Min	Max	Unit
Operating temperature	-40	85	°C
VDD_IO	1.7	3.6	V
VDD_BAT	2.5	4.4	V
VDD_CHG	0	6.5	V
Terminal voltages	0	Vdd	V

Table 2: Recommended operating conditions

Terminal characteristics

	Min	Typ	Max	Unit
I/O voltage levels				
V_{IL} input logic level low	-0.4	-	0.25xVDD	V
V_{IH} input logic level high	0.625xVDD	-	Vdd + 0.3	V
V_{OL} output logic level low	0	-	0.125	V
V_{OH} output logic level high	0.75xVDD	-	VDD	V
Reset terminal				
$V_{TH,res}$ threshold voltage	0.64	0.85	1.5	V
R_{IRES} input resistance		220		kΩ
C_{IRES} input capacitance		220		nF
Input and tri-state current with				
Strong pull-up	-100	-40	-10	µA
Strong pull-down	10	40	100	µA
Weak pull-up	-5	-1	-0.2	µA
Weak pull-down	0.2	1	5	µA
I/O pad leakage current	-1	0	1	µA
LED driver pad				
Off current	-	1	2	µA
On resistance (V_{PAD} < 0.5 V)	-	20	33	Ω
On resistance, pad enabled by battery charger (V_{PAD} < 0.5 V)	-	20	50	Ω

Table 3: Terminal characteristics

Battery charger

Battery charger		Min	Typ	Max	Unit
VDD_CHG		4.5	-	6.5	V
Charging mode (VDD_BAT rising to 4.2 V)					
Supply current [a]		-	4.5	6	mA
Battery trickle charge current [b] [c]	Maximum setting	-	14	-	mA
	Minimum setting	-	4	-	mA
Maximum battery fast charge current [d] [c]	Headroom > 0.7 V [e]	-	140	-	mA
	Headroom = 0.3 V	-	120	-	mA
Maximum battery fast charge current [d] [c]	Headroom > 0.7 V	-	40	-	mA
	Headroom = 0.3 V	-	35	-	mA
Trickle charge voltage threshold		-	2.9	-	V
Float voltage (with correct trim value set), V_{FLOAT} [f]		4.17	4.2	4.23	V
Float voltage trim step size [f]		-	50	-	mV
Battery charge termination current, as a percentage of the fast charge current		5	10	20	%
Standby Mode (BAT_P falling from 4.2V)					
Supply current [a]		-	1.5	2	mA
Battery current		-	-5	-	µA
Battery recharge hysteresis [g]		100	-	200	mV
Shutdown Mode (VDD_CHG too low or disabled by firmware)					
VDD_CHG under-voltage threshold	VDD_CHG rising	-	3.9	-	V
	VDD_CHG falling	-	3.7	-	V
VDD_CHG - BAT_P lockout threshold	VDD_CHG rising	-	0.22	-	V
	VDD_CHG falling	-	0.17	-	V
Supply current		-	1.5	2	mA
Battery current		-1	-	0	µA

[a] Current into VDD_CHG - does not include current delivered to battery (I VDD_CHG - I BAT_P)

[b] BAT_P < Float voltage

[c] Charge current can be set in 16 equally spaced steps

[d] Trickle charge threshold < BAT_P < Float voltage

[e] Where headroom = VDD_CHG - BAT_P

[f] Float voltage can be adjusted in 15 steps. Trim setting is determined in production test and must be loaded into the battery charger by firmware during boot-up sequence

[g] Hysteresis of (VFLOAT - BAT_P) for charging to restart

Table 4: Battery charger characteristics

Stereo CODEC Analogue to Digital Converter						
Parameter	**Conditions**		**Min**	**Typ**	**Max**	**Unit**
Resolution			-	-	16	Bits
Input Sample Rate, F_{sample}			8	-	44.1	kHz
Signal to Noise Ratio, SNR	fin = 1kHz B/W = 20Hz→20kHz A-Weighted THD+N < 1% 150mVpk-pk input	F_{sample}				
		8 kHz	-	82	-	dB
		11.025 kHz	-	81	-	dB
		16 kHz	-	80	-	dB
		22.050 kHz	-	79	-	dB
		32 kHz	-	79	-	dB
		44.1 kHz	-	78	-	dB
Digital Gain	Digital Gain Resolution = 1/32dB		-24	-	21.5	dB
Analogue Gain	Analogue Gain Resolution = 3dB		-3	-	42	dB
Input full scale at maximum gain (differential)			-	4	-	mV rms
Input full scale at minimum gain (differential)			-	800	-	mV rms
3dB Bandwidth			-	20	-	kHz
Microphone mode input impedance			-	6.0	-	kΩ
THD+N (microphone input) @ 30mV rms input			-	0.04	-	%

Table 5: Stereo CODEC ADC characteristics

Stereo CODEC Digital to Analog Converter						
Parameter	**Conditions**		**Min**	**Typ**	**Max**	**Unit**
Resolution			-	-	16	Bits
Input Sample Rate, F_{sample}			8	-	48	kHz
Signal to Noise Ratio, SNR	fin = 1kHz B/W = 20Hz→20kHz A-Weighted THD+N < 1% 150mVpk-pk input	F_{sample}				
		8 kHz	-	95	-	dB
		11.025 kHz	-	95	-	dB
		16 kHz	-	95	-	dB
		22.050 kHz	-	95	-	dB
		32 kHz	-	95	-	dB
		44.1 kHz	-	95	-	dB
Digital Gain	Digital Gain Resolution = 1/32dB		-24	-	21.5	dB
Analogue Gain	Analogue Gain Resolution = 3dB		0	-	-21	dB
Output voltage full scale swing (differential)			-	750	-	mV rms
Allowed Load		Resistive	16(8)	-	OC	Ω
		Capacitive	-	-	500	pF
THD+N 100kΩ load			-	-	0.01	%
THD+N 16Ω load			-	-	0.1	%
SNR (Load = 16Ω, 0dBFS input relative to digital silence)			-	95	-	dB

Table 6: Stereo CODEC DAC characteristics

Radio characteristics and general specifications

	Specification		Note
Operating frequency range	(2400 ... 2483,5) MHz		ISM Band
Lower quard band	2 MHz		
Upper quard band	3,5 MHz		
Carrier frequency	2402 MHz ... 2480 MHz		f = 2402 + k, k = 0...78
Modulation method	GFSK (1 Mbps) Π/4 DQPSK (2Mbps) 8DQPSK (3Mbps)		
Hopping	1600 hops/s, 1 MHz channel space		
Maximum data rate	GFSK:	Asynchronous, 723.2 kbps / 57.6 kbps Synchronous: 433.9 kbps / 433.9 kbps	
	Π/4 DQPSK:	Asynchronous, 1448.5 kbps / 115.2 kbps Synchronous: 869.7 kbps / 869.7 kbps	
	8DQPSK:	Asynchronous, 2178.1 kbps / 177.2 kbps Synchronous: 1306.9 kbps / 1306.9 kbps	
Receiving signal range	TBD		Typical condition
Receiver IF frequency	1.5 MHz		Center frequency
Transmission power	Min	TBD	
	Max	TBD	
RF input impedance	50 Ω		
Compliance	Bluetooth specification, version 2.1 + EDR		
USB specification	USB specification, version 1.1 (USB 2.0 compliant)		

Table 7: Radio characteristics and general specifications

3.1 Radio Characteristics

	WT32-A (*)		WT32-E (**)	
	DH1	3DH5	DH1	3DH5
Sensitivity (0.1% BER)	-87 dBm	-81 dBm	-87 dBm	-81 dBm
Max output power (typical)	0 dBm	-1 dBm	8 dBm	5 dBm

(*) Measured from the antenna
(**) Measured from the w-fl connector

3.1.1 Radiation Pattern (WT32EK)

- Peak gain = 1.5 dBi
- Total efficiency = 50%

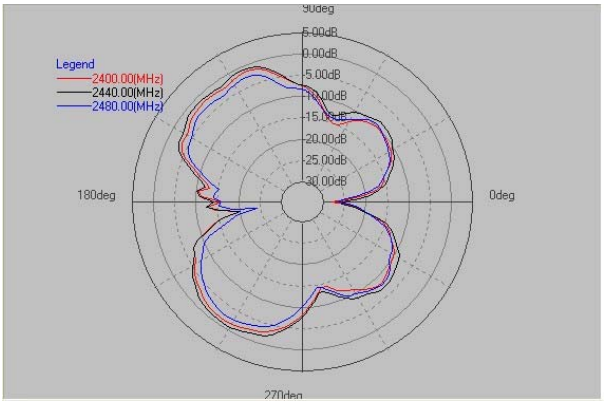

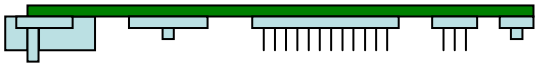

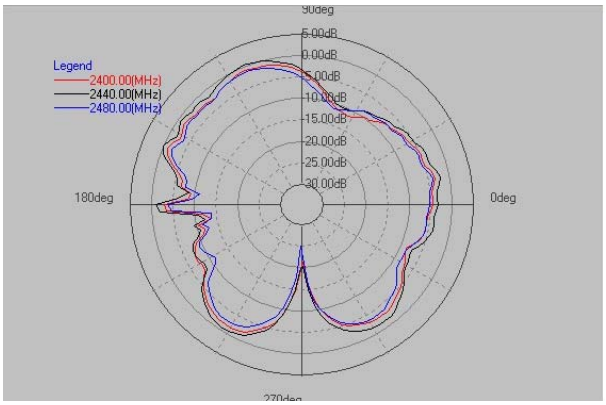

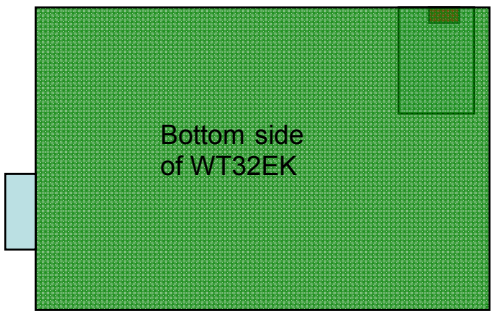

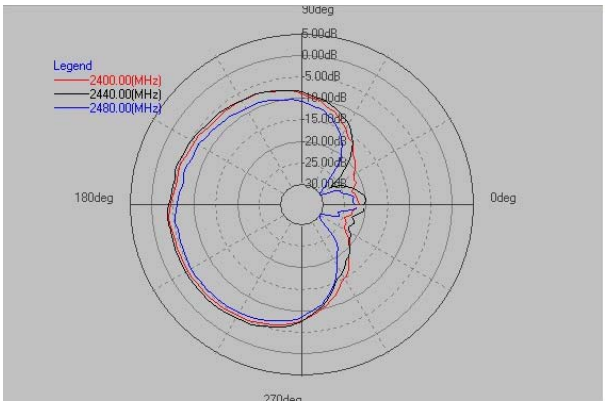

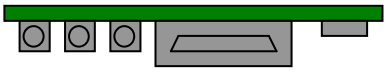

4 WT32 Pin Description

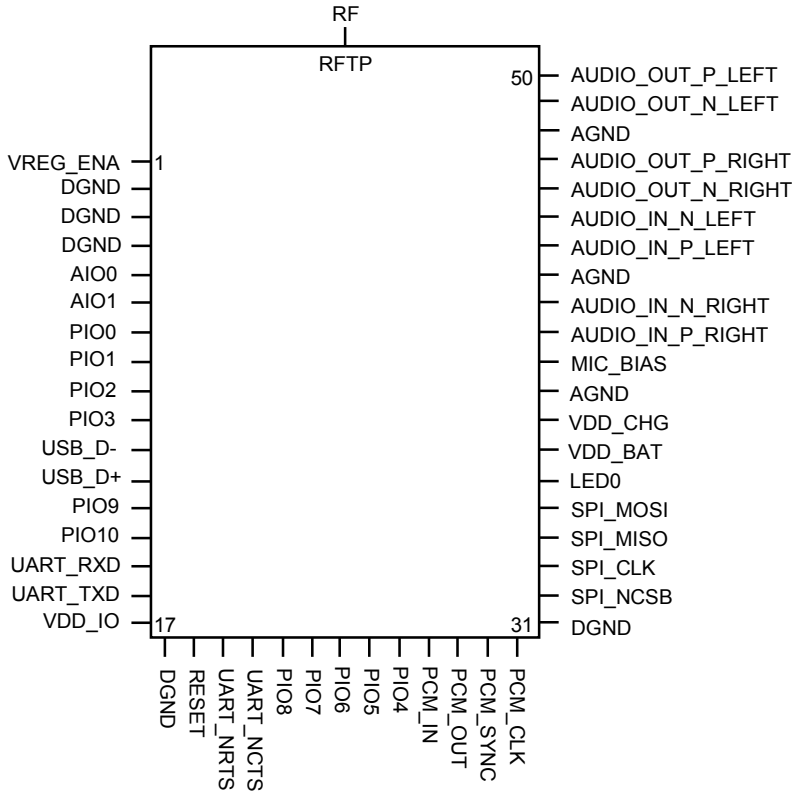

Figure 2: WT32 connection diagram (top view)

NOTE: VREG_ENA pin is only available with the production version of the module. With engineering samples the VREG_ENA is internally connected to VDD_BAT.

DEVICE TERMINALS	
1	VREG_ENA
2	DGND
3	DGND
4	DGND
5	AIO0
6	AIO1
7	PIO0
8	PIO1
9	PIO2
10	PIO3
11	USB_DN
12	USB_DP
13	PIO9
14	PIO10
15	RXD
16	TXD
17	VDD_IO
18	DGND
19	RESET
20	RTS#

21	CTS#
22	PIO8
23	PIO7
24	PIO6
25	PIO5
26	PIO4
27	PCM_IN
28	PCM_OUT
29	PCM_SYNC
30	PCM_CLK
31	DGND
32	SPI_CS#
33	SPI_CLK
34	SPI_MISO
35	SPI_MOSI
36	LED0
37	VDD_BAT
38	VDD_CHG
39	AGND
40	MIC_BIAS
41	AUDIO_IN _P_RIGHT
42	AUDIO_IN _N_RIGHT
43	AGND
44	AUDIO_IN _P_LEFT
45	AUDIO_IN_N_LEFT
46	AUDIO_OUT _N_RIGHT
47	AUDIO_OUT _P_RIGHT
48	AGND
49	AUDIO_OUT_N_LEFT
50	AUDIO_OUT_P_LEFT
RFTP	RF test point

Table 8: WT32 device terminals

4.1 Device Terminal Functions

DGND

Connect digital GND pins to the ground plane of the PCB.

AGND

Ground for the audio signals. AGND and DGND are internally combined in WT32. Use solid ground plane for AGND and keep AGND and DGND planes separated.

VDD_IO

Supply voltage connection for the digital I/Os of the module. Supply voltage at this pin can vary between 1.8 V and 3.3 V. Output voltage swing at the digital terminals of WT32 is 0 to VDD_IO.

VDD_BAT

Input for an internal 1.8 V switched mode regulator combined with output of the internal battery charger. See chapter 5.3 for detailed description for the charger. When not powered from a battery, VDD_IO and VDD_BAT can be combined to a single 3.3 V supply voltage.

VREG_ENA

Enable pin for the internal 1,8 V regulator. This pin is only available with production version. With the engineering samples VREG_ENA is internally connected to VDD_BAT.

VDD_CHG

Charger input voltage. The charger will start operating when voltage to this pin is applied. When the charger is not used, this pin should be left floating. See chapter 5.3 for detailed description of the charger.

RES

The RESET pin is an active high reset and is internally filtered using the internal low frequency clock oscillator. A reset will be performed between 1.5 and 4.0ms following RESET being active. It is recommended that RESET be applied for a period greater than 5ms.

WT32 has an internal reset circuitry, which keeps the reset pin active until supply voltage has reached stability in the start up. This ensures that supply for the flash memory inside the WT32 will reach stability before BC4 chip fetches instructions from it. Schematic of the reset circuitry is shown in figure 3. Rising supply voltage charges the capacitor, which will activate the reset of WT32. The capacitor discharges through 220 kΩ resistor, which eventually deactivates the reset. Time constant of the RC circuitry is set in a way that the supply voltage is safely stabilized before the reset deactivates. Pull-up or pull-down resistor should not be connected to the reset pin to ensure proper start up of WT32. If the reset pin of WT32 is in use, the designer should verify that WT32 remains in reset during a start-up until all supply voltages have stabilized.

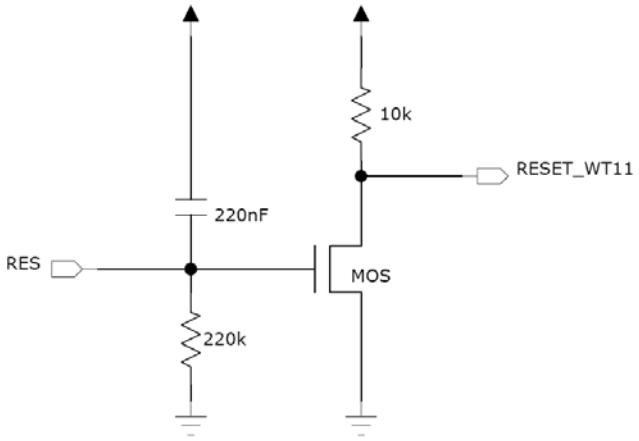

Figure 3: WT32 internal reset circuitry

See chapter 4 for detailed description of reset.

PIO0 – PIO10

Programmable digital I/O lines. All PIO lines can be configured through software to have either weak or strong pull-ups or pull-downs. Configuration for each PIO line depends on the application. See section 10 “I/O parallel ports” for detailed descriptions for each terminal. Default configuration for all of the PIO lines is input with weak internal pull-up.

AIO0 – AIO1

AIOs can be used to monitor analogue voltages such as a temperature sensor for the battery charger. AIOs can also be configured to be used as digital I/Os. The voltage level at these pins is 0 V to 1,5 V.

UART_NRTS

A CMOS output with a weak internal pull-up. This pin can be used to implement RS232 hardware flow control where RTS (request to send) is an active low indicator. The UART interface requires an external RS232 transceiver chip.

UART_NCTS

A CMOS input with a weak internal pull-down. This pin can be used to implement RS232 hardware flow control where CTS (clear to send) is an active low indicator. The UART interface requires an external RS232 transceiver chip.

UART_RXD

A CMOS input with a weak internal pull-down. RXD is used to implement UART data transfer from another device to WT32. The UART interface requires an external RS232 transceiver chip.

UART_TXD

A CMOS output with a weak internal pull-up. TXD is used to implement UART data transfer from WT32 to another device. The UART interface requires external RS232 transceiver chip.

PCM_OUT

A CMOS output with a weak internal pull-down. Used in the PCM (pulse code modulation) interface to transmit digitized audio. The PCM interface is shared with the I^2S interface.

PCM_IN

A CMOS input with a weak internal pull-down. Used in the PCM interface to receive digitized audio. The PCM interface is shared with the I^2S interface.

PCM_CLK

A bi-directional synchronous data clock signal pin with a weak internal pull-down. PCMC is used in the PCM interface to transmit or receive the CLK signal. When configured as a master, WT32 generates the clock signal for the PCM interface. When configured as a slave, the PCMC is an input and receives the clock signal from another device. The PCM interface is shared with the I^2S interface.

PCM_SYNC

A bi-directional synchronous data strobe with a weak internal pull-down. When configured as a master, WT32 generates the SYNC signal for the PCM interface. When configured as a slave, the PCMS is an input and receives the SYNC signal from another device. The PCM interface is shared with the I^2S interface.

USB_D+

A bi-directional USB data line with a selectable internal 1.5 kΩ pull-up implemented as a current source (compliant with USB specification v1.2) An external series resistor is required to match the connection to the characteristic impedance of the USB cable.

USB_D-

A bi -directional USB data line. An external series resistor is required to match the connection to the characteristic impedance of the USB cable.

SPI_NCSB

A CMOS input with a weak internal pull-down. Active low chip select for SPI (serial peripheral interface).

SPI_CLK

A CMOS input for the SPI clock signal with a weak internal pull-down. WT32 is the slave and receives the clock signal from the device operating as a master.

SPI_MISO

An SPI data output with a weak internal pull-down.

SPI_MOSI

An SPI data input with a weak internal pull-down.

RF

This pin can be used when not using a chip antenna or w.fl connector of the module.

AUDIO_IN_P_RIGHT and AUDIO_IN_N_RIGHT

Right channel audio inputs. This dual audio input can be configured to be either single-ended or fully differential and programmed for either microphone or line input. Route differential pairs close to each other and use a solid dedicated audio ground plane for the audio signals.

AUDIO_IN_P_LEFT and AUDIO_IN_N_LEFT

Left channel audio input. ESD protection and layout considerations similar to right channel audio should be used.

AUDIO_OUT_P_RIGHT and AUDIO_OUT_N_RIGHT

Right channel audio output. The audio output lines should be routed differentially to either the speakers or to the output amplifier, depending on whether or not a single-ended signal is required. Use low impedance ground plane dedicated for the audio signals.

AUDIO_OUT_P_LEFT and AUDIO_OUT_N_LEFT

Left channel audio output. The same guidelines apply to this section as discussed previously.

MIC_BIAS

Bias voltage output for a microphone. Use the same layout guidelines as discussed previously with other audio signals.

LED0

WT32 includes a pad dedicated to driving LED indicators. This terminal may be controlled by firmware and it can also be set by the battery charger. The terminal is an open-drain output, so the LED must be connected from a positive supply rail to the pad in series with a current limiting resistor.

It is recommended that the LED pad is operated with a pad voltage below 0.5V. In this case, the pad can be thought of as a resistor, RON. The resistance together with the external series resistor will set the current, ILED, in the LED. Value for the external series resistance can be calculated from the Equation 1

$$R_{LED} = \frac{VDD - V_F}{I_{LED}} - R_{ON}$$

Equation 1: LED series resistor

Where V_F is the forward voltage drop of the LED, I_{LED} is the forward current of the LED and R_{ON} is the on resistance (typically 20 Ω) of the LED driver.

5 Power Control

5.1 Power Supply Configuration

WT32 contains an internal battery charger and a switch mode regulator that is mainly used for internal blocks of the module. The module can be powered from a single 3.3 V supply provided that VDD_CHG is floating. Alternatively the module can be powered from a battery connected to VDD_BAT and using an external regulator for VDD_IO. 1.8 V to 3.3 V supply voltage for VDD_IO can be used to give desired signal levels for the digital interfaces of the module. USB, however, requires 3.3 V for proper operation and thus, when USB is in use, 3.3 V for VDD_IO is mandatory.

AIO pins of the module use 1.8 V from the internal regulator and thus voltage level with these pins is within 0 V and 1.8 V.

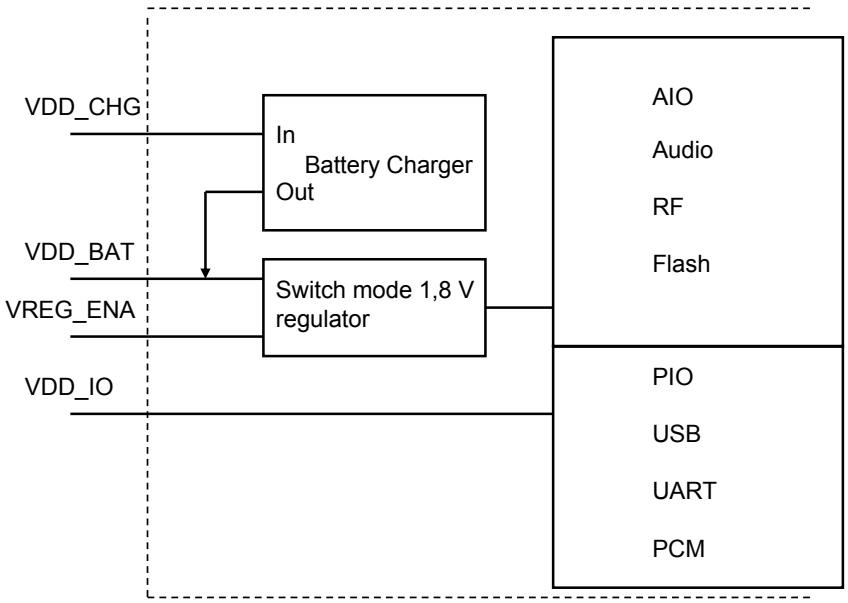

Figure 4: Power supply configuration of WT32

5.2 Voltage Regulator Enable Pin

The regulator enable pin VREG_ENA is used to enable WT32. VREG_ENA enables the on-chip switched mode regulator.

VREG_ENA is active high, with a logic threshold of around 1V, and it has weak pull-down. It can tolerate voltages up to 4.9V, so it may be connected directly to a battery to enable the device.

VREG_ENA can be configured with iWRAP to either latch on/off the internal regulators at the rising edge of the input voltage, or to latch the regulators on at the rising edge and shut down the regulators at the falling edge. Following figure shows an example of how to to implement a power on/off button using the latch feature. See iWRAP user guide for the details on configuration.

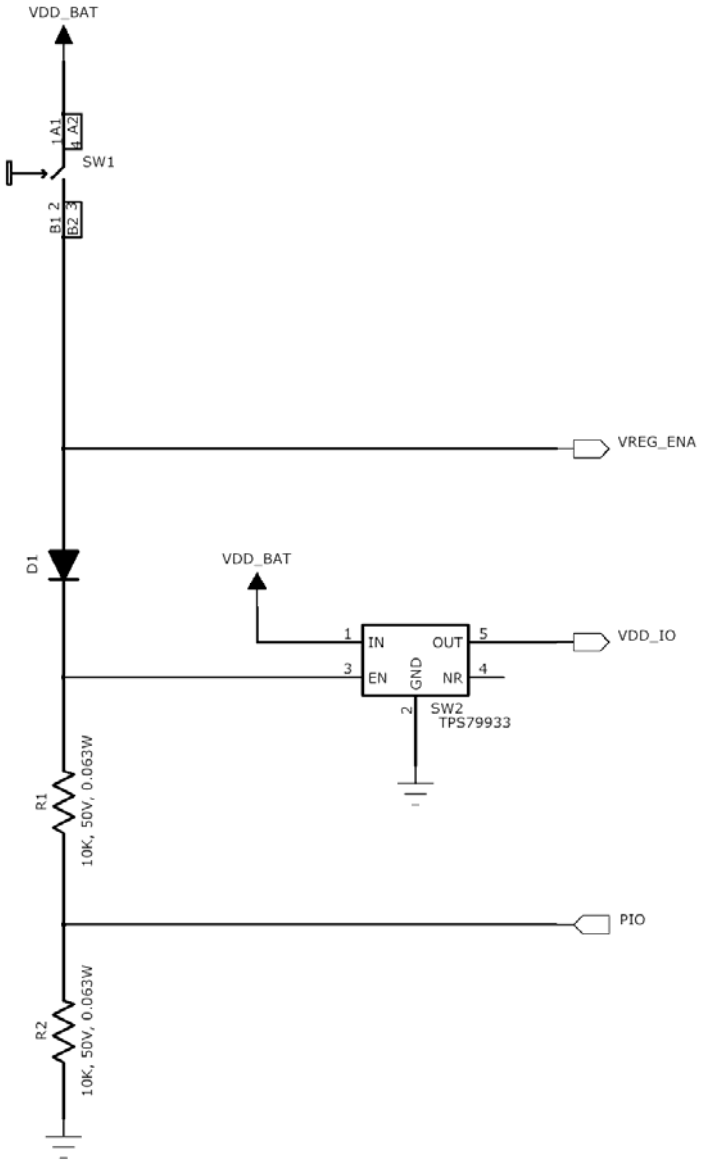

Figure 5: Example of how to make a power on/off button using latch feature of the internal regulators

In figure 6 the internal regulators are latched on at the rising edge, i.e when pressing SW1. One of the PIOs is configured to power hold thus keeping the external regulator on until shut down by pressing SW1 again.

5.3 Battery Charger

The battery charger is a constant current / constant voltage charger circuit, and is suitable for lithium ion/polymer batteries only. It shares a connection to the battery terminal, VDD_BAT, with the switch-mode regulator. The charger is initially calibrated by Bluegiga Technologies to have V_{float} = 4.2 V.

The constant current level can be varied to allow charging of different capacity batteries.

The charger enters various states of operation as it charges a battery. These are shown below:

- Off: entered when the charger is disconnected.
- Trickle Charge: entered when the battery voltage is below 2.9V.
- Fast Charge - Constant Current: entered when the battery voltage is above 2.9V.
- Fast Charge - Constant Voltage: entered when the battery has reached V_{float}, the charger switches mode to maintain the cell voltage at V_{float} voltage by adjusting the constant charge current.
- Standby: this is the state when the battery is fully charged and no charging takes place.

When a voltage is applied to the charger input terminal VDD_CHG, and the battery is not fully charged, the charger will operate and a LED connected to the terminal LED0 will illuminate. By default, until the firmware is running, the LED will pulse at a low-duty cycle to minimize current consumption.

The battery charger circuitry auto-detects the presence of a power source, allowing the firmware to detect, using an internal status bit, when the charger is powered. Therefore, when the charger supply is not connected to VDD_CHG, the terminal must be left open circuit. The VDD_CHG pin, when not connected, must be allowed to float and not be pulled to a power rail. When the battery charger is not enabled, this pin may float to a low undefined voltage. Any DC connection will increase current consumption of the device. Capacitive components such as diodes, FETs, and ESD protection, may be connected.

The battery charger is designed to operate with a permanently connected battery. If the application permits the charger input to be connected while the battery is disconnected, the VDD_BAT pin voltage may become unstable. This, in turn, may cause damage to the internal switch-mode regulator. Connecting a 470µF capacitor to VDD_BAT limits these oscillations thus preventing damage.

WARNING:

Use good consideration for battery safety. Do not charge with too much current. Do not charge when the temperature is above 60°C or below 0°C. WT32 is initially calibrated to stop charging when battery voltage is at 4.2 V. Do not try to charge batteries above 4.2 V. Do not short circuit the battery or discharge below 1.5 V.

5.4 RESET

WT32 may be reset from several sources: reset pin, power on reset, a UART break character or through software configured watchdog timer.

The power on reset occurs when the VDD_CORE supply falls below typically 1.26V and is released when VDD_CORE rises above typically 1.31V. At reset, the digital I/O pins are set to inputs for bi-directional pins and outputs are tri-state. The pull-down state is shown in Table 9.

The chip status after a reset is as follows:

- Warm Reset: data rate and RAM data remain available
- Cold Reset(10): data rate and RAM data are not available

Table 9 shows the pin states of WT32 on reset. Pull-up (PU) and pull-down (PD) default to weak values unless specified otherwise.

Pin Name / Group	I/O Type	State on Reset
USB_D+	Digital bi-directional	N/A
USB_D-	Digital bi-directional	N/A
UART_RX	Digital input with PD	PD
UART_CTS	Digital input with PD	PD
UART_TX	Digital bi-directional with PU	PU
UART_RTS	Digital bi-directional with PU	PU
SPI_MOSI	Digital input with PD	PD
SPI_CLK	Digital input with PD	PD
SPI_CS#	Digital input with PU	PU
SPI_MISO	Digital tri-state output with PD	PD
PCM_IN	Digital input with PD	PD
PCM_CLK	Digital bi-directional with PD	PD
PCM_SYNC	Digital bi-directional with PD	PD
PCM_OUT	Digital tri-state output with PD	PD
PIO[10:0]	Digital bi-directional with PU/PD	PD

Table 9: Pin states on reset

6 Serial Interfaces

6.1 UART Interface

WT32 Universal Asynchronous Receiver Transmitter (UART) interface provides a simple mechanism for communicating with other serial devices using the RS232 standard. The UART interface of WT32 uses voltage levels from 0 to VDD_IO and thus an external transceiver IC is required to meet the voltage level specifications of RS232.

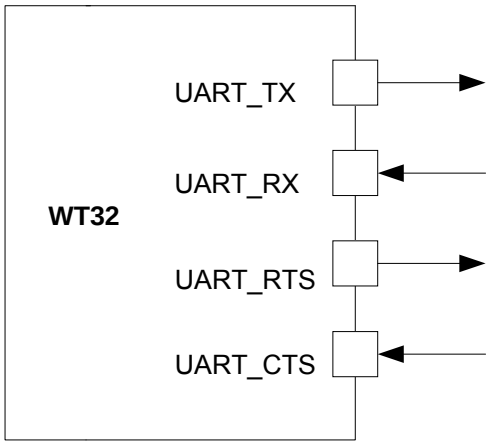

Figure 6: WT32 UART interface

Four signals are used to implement the UART function, as shown in Figure 7. When WT32 is connected to another digital device, UART_RX and UART_TX transfer data between the two devices. The remaining two signals, UART_CTS and UART_RTS, can be used to implement RS232 hardware flow control where both are active low indicators. DTR, DSR and DCD signals can be implemented by using PIO terminals of WT32. All UART connections are implemented by using CMOS technology and have signaling levels of 0V and VDD_IO.

In order to communicate with the UART at its maximum data rate using a standard PC, an accelerated serial port adapter card is required for the PC.

Parameter		**Possible values**
Baud rate	Minimum	1200 baud (≤2%Error)
		9600 baud (≤1%Error)
	Maximum	3.0Mbaud (≤1%Error)
Flow control		RTS/CTS, none
Parity		None, Odd, Even
Number of stop bits		1 or 2
Bits per channel		8

Table 10: Possible UART settings

The UART interface is capable of resetting WT32 upon reception of a break signal. A Break is identified by a continuous logic low (0V) on the UART_RX terminal, as shown in Figure 8. If tBRK is longer than the value, defined by the PS Key PSKEY_HOST_IO_UART_RESET_TIMEOUT, (0x1a4), a reset will occur. This feature allows a host to initialize the system to a known state. Also, WT32 can emit a Break character that may be used to wake the Host.

Since UART_RX terminal includes a weak internal pull-down, it cannot be left open unless disabling UART interface using PS_KEY settings. If UART is not disabled, a pull-up resistor has to be connected to UART_RX. The UART interface requires an external RS232 transceiver, which usually includes the required pull-up.

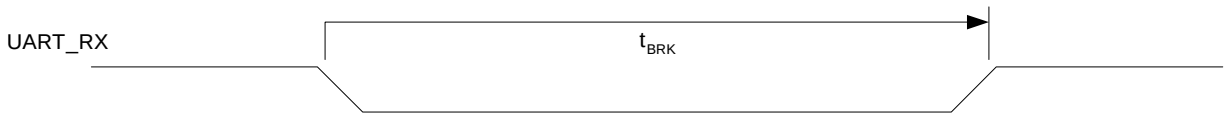

Figure 7: Break signal

Table 11 shows a list of commonly used Baud rates and their associated values for the Persistent Store Key PSKEY_UART_BAUDRATE (0x204). There is no requirement to use these standard values. Any Baud rate within the supported range can be set in the Persistent Store Key according to the formula in Equation below.

$$\text{Baud Rate} = \frac{\text{PSKEY_UART_BAUD_RATE}}{0.004096}$$

Equation 2: Baud rate calculation formula

Baud rate	Persistent store values		Error
	Hex	Dec	
1200	0x0005	5	1.73%
2400	0x000a	10	1.73%
4800	0x0014	20	1.73%
9600	0x0027	39	-0.82%
19200	0x004f	79	0.45%
38400	0x009d	157	-0.18%
57600	0x00ec	263	0.03%
76800	0x013b	315	0.14%
115200	0x01d8	472	0.03%
230400	0x03b0	944	0.03%
460800	0x075f	1887	-0.02%
921600	0x0ebf	3775	0.00%
1382400	0x161e	5662	-0.01%
1843200	0x1d7e	7550	0.00%
2765800	0x2c3d	11325	0.00%

Table 11: UART baud rates and error values

6.1.1 UART Configuration While RESET is Active

The UART interface for WT32 while the chip is being held in reset is tri-state. This will allow the user to daisy chain devices onto the physical UART bus. The constraint on this method is that any devices connected to this bus must tri-state when a WT32 reset is de-asserted and the firmware begins to run.

6.1.2 UART Bypass Mode

Alternatively, for devices that do not tri-state the UART bus, the UART bypass mode on WT32 can be used. The default state of WT32 after reset is de-asserted, this is for the host UART bus to be connected to the WT32 UART, thereby allowing communication to WT32 via the UART.

In order to apply the UART bypass mode, a BCCMD command will be issued to WT32. Upon this, WT32 will switch the bypass to PIO[7:4] as shown in Figure 9. Once the bypass mode has been invoked, WT32 will enter the deep sleep state indefinitely.

In order to re-establish communication with WT32, the chip must be reset so that the default configuration takes effect.

It is important for the host to ensure a clean Bluetooth disconnection of any active links before the bypass mode is invoked. Therefore, it is not possible to have active Bluetooth links while operating the bypass mode.

The current consumption for a device in UART Bypass Mode is equal to the values quoted for a device in standby mode.

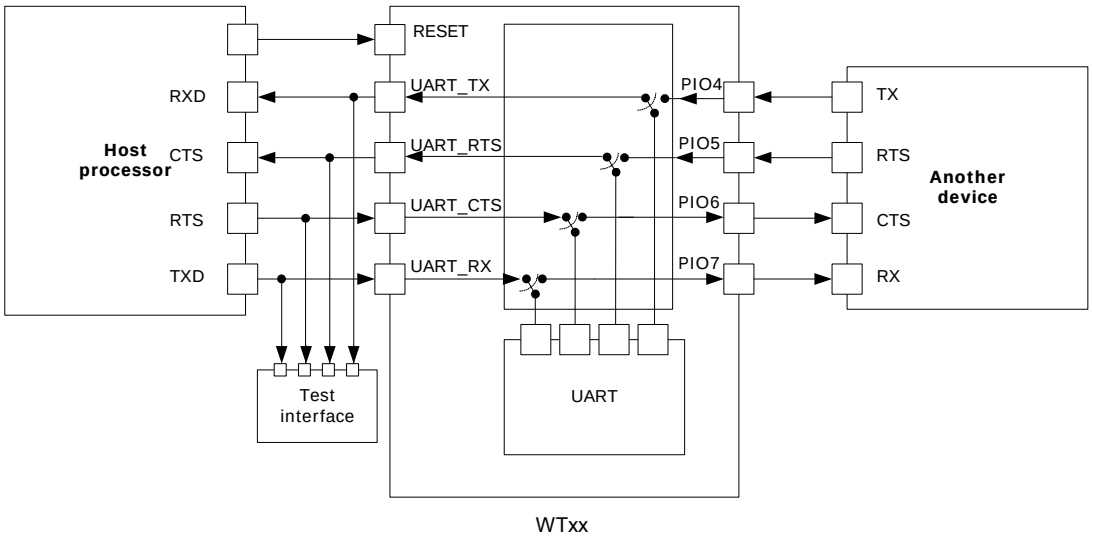

Figure 8: UART bypass mode

6.2 USB Interface

WT32 USB devices contain a full speed (12Mbits/s) USB interface that is capable of driving a USB cable directly. No external USB transceiver is required. To match the connection to the characteristic impedance of the USB cable, series resistors must be included to both of the signal lines. These should be of 1% tolerance and the value required may vary between 0 and 20 ohm with 10 ohm being nominal. The resistors should be placed close to the USB pins of the module in order to avoid reflections. Internally, the module has 22-ohm resistors in series. The total input impedance seen by the cable is affected by the IC characteristics, track layout and the connector. The cable impedance is approximately 40 ohms.

The device operates as a USB peripheral, responding to requests from a master host controller such as a PC. Both the OHCI and the UHCI standards are supported. The set of USB endpoints implemented can behave as specified in the USB section of the Bluetooth v2.0 + EDR specification or alternatively can appear as a set of endpoints appropriate to USB audio devices such as speakers.

As USB is a Master/Slave oriented system (in common with other USB peripherals), WT32 only supports the USB Slave operation.

6.2.1 USB Pull-Up Resistor

WT32 features an internal USB pull-up resistor. This pulls the USB_DP pin weakly high when WT32 is ready to enumerate. It signals to the PC that it is a full speed (12Mbit/s) USB device.

The USB internal pull-up is implemented as a current source, and is compliant with Section 7.1.5 of the USB specification v1.2. The internal pull-up pulls USB_D+ high to at least 2.8V when loaded with a 15kΩ +/-5% pull-down resistor (in the hub/host). This presents a Thevenin resistance to the host of at least 900Ω. Alternatively, an external 1.5kΩ pull-up resistor can be placed between a PIO line and D+ on the USB cable. The firmware must be alerted as to which mode is used by setting PS Key PSKEY_USB_PIO_PULLUP appropriately. The default setting uses the internal pull-up resistor.

6.2.2 Self Powered Mode

In self powered mode, the circuit is powered from its own power supply and not from the VBUS (5V) line of the USB cable. It only draws a small leakage current (below 0.5mA) from VBUS on the USB cable. This is the easier mode which to design for, as the design is not limited by the power that can be drawn from the USB hub or root port. However, it requires that VBUS be connected to WT32 via a voltage divider (Rvb1 and Rvb2), so that WT32 can detect when VBUS is powered up. The voltage divider is essential to drop the 5V voltage at the VBUS to 3.3V expected at the USB interface of WT32. WT32 will not pull USB_DP high when VBUS is off.

Self powered USB designs (powered from a battery or PSU) must ensure that a PIO line is allocated for USB pull-up purposes. A 1.5K 5% pull-up resistor between USB_DP and the selected PIO line should be fitted to the design. Failure to fit this resistor may result in the design failing to be USB compliant in the self powered mode. The internal pull-up in WT32 is only suitable for bus powered USB devices, such as dongles.

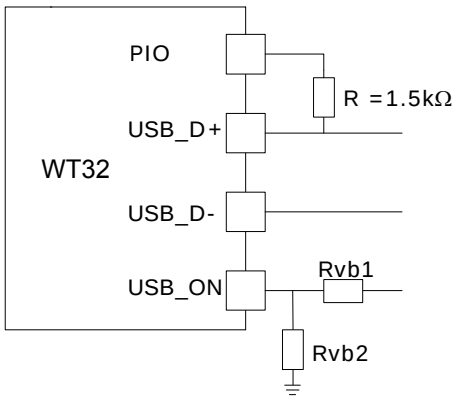

Figure 9: USB in self powered mode

The terminal marked USB_ON can be any free PIO pin. The PIO pin selected must be registered by setting PSKEY_USB_PIO_VBUS to the corresponding pin number. In self powered mode, PSKEY_USB_PIO_PULLUP must be set to match with the PIO selected.

Note:

USB_ON is shared with WT32 PIO terminals (PIO2-PIO7).

6.2.3 Bus Powered Mode

In bus powered mode, the application circuit draws its current from the 5V VBUS supply on the USB cable. WT32 negotiates with the PC during the USB enumeration stage about how much current it is allowed to consume.

For WT32 Bluetooth applications, it is recommended that the regulator used to derive 3.3V from VBUS is rated at 100mA average current and should be able to handle peaks of 120mA without fold back or limiting. In bus powered mode, WT32 requests 100mA during enumeration.

When selecting a regulator, be aware that VBUS may go as low as 4.4V. The inrush current (when charging the reservoir and supply decoupling capacitors) is limited by the USB specification (see USB specification v1.1, Section 7.2.4.1). Some applications may require soft start circuitry to limit inrush current if more than 10pF is present between VBUS and GND.

The 5V VBUS line emerging from a PC is often electrically noisy. As well as regulation down to 3.3V, applications should include careful filtering of the 5V line to attenuate noise that is above the voltage regulator bandwidth.

In bus powered mode, PSKEY_USB_PIO_PULLUP must be set to 16 for internal pull-up (default configuration in WT32).

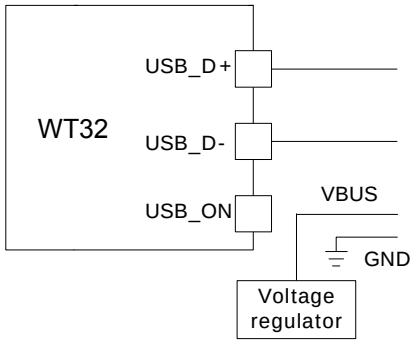

Figure 10: USB in bus powered mode

6.2.4 Suspend Current

All USB devices must permit the USB controller to place them in a USB Suspend mode. While in USB Suspend, bus powered devices must not draw more than 0.5mA from USB VBUS (self powered devices may draw more than 0.5mA from their own supply). This current draw requirement prevents operation of the radio by bus powered devices during USB Suspend.

The voltage regulator circuit itself should only draw a small quiescent current (typically less than 100uA) to ensure adherence to the suspend current requirement of the USB specification. This is not normally a problem with modern regulators. Ensure that external LEDs and/or amplifiers can be turned off by WT32. The entire circuit must be able to enter the suspend mode. (For more details on USB Suspend, see separate CSR documentation).

6.2.5 Detach and Wake-Up Signaling

WT32 can provide out-of-band signaling to a host controller by using the control lines called 'USB_DETACH' and 'USB_WAKE_UP'. These are outside the USB specification (no wires exist for them inside the USB cable), but can be useful when embedding WT32 into a circuit where no external

USB is visible to the user. Both control lines are shared with PIO pins and can be assigned to any PIO pin by setting the PS Keys PSKEY_USB_PIO_DETACH and PSKEY_USB_PIO_WAKEUP to the selected PIO number.

USB_DETACH is an input that, when asserted high, causes WT32 to put USB_D- and USB_D+ in high impedance state and turns off the pull-up resistor on D+. This detaches the device from the bus and is logically equivalent to unplugging the device. When USB_DETACH is taken low, WT32 will connect back to USB and await enumeration by the USB host.

USB_WAKE_UP is an active high output (used only when USB_DETACH is active) to wake up the host and allow USB communication to recommence. It replaces the function of the software USB WAKE_UP message (which runs over the USB cable), and cannot be sent while WT32 is effectively disconnected from the bus.

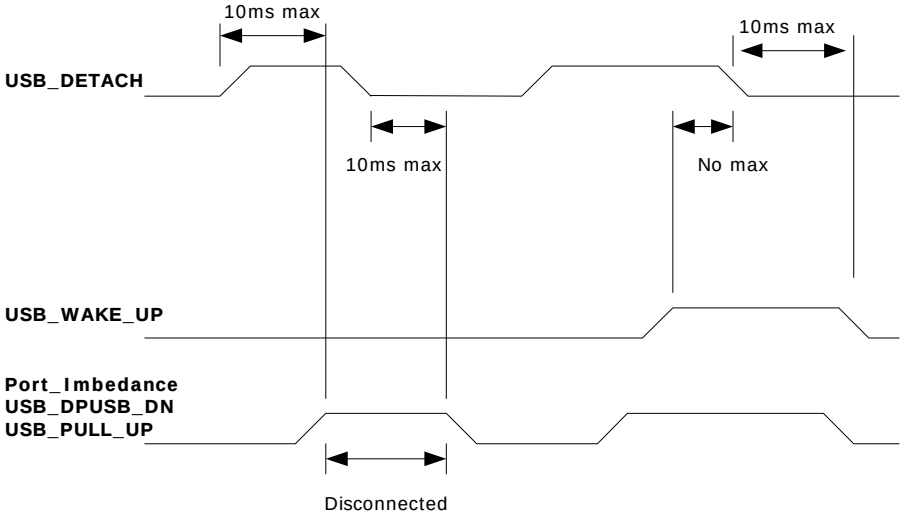

Figure 11: USB_DETACH and USB_WAKE_UP Signal

6.2.6 USB Driver

A USB Bluetooth device driver is required to provide a software interface between WT32 and Bluetooth software running on the host computer. Suitable drivers are available from www.bluegiga.com/techforum/.

6.2.7 USB 1.1 Compliance

WT32 is qualified to the USB specification v1.1, details of which are available from http://www.usb.org. The specification contains valuable information on aspects such as PCB track impedance, supply inrush current and product labeling.

Although WT32 meets the USB specification, Bluegiga Technologies cannot guarantee that an application circuit designed around the module is USB compliant. The choice of application circuit, component choice and PCB layout all affect USB signal quality and electrical characteristics. The information in this document is intended as a guide and should be read in association with the USB specification, with particular attention being given to Chapter 7. Independent USB qualification must be sought before an application is deemed USB compliant and can bear the USB logo. Such qualification can be obtained from a USB plug fest or from an independent USB test house.

Terminals USB_D+ and USB_D- adhere to the USB specification 2.0 (Chapter 7) electrical requirements.

6.2.8 USB 2.0 Compatibility

WT32 is compatible with USB v2.0 host controllers; under these circumstances the two ends agree the mutually acceptable rate of 12Mbits/s according to the USB v2.0 specification.

6.3 SPI Interface

The synchronous serial port interface (SPI) is for interfacing with other digital devices. The SPI port can be used for system debugging. It can also be used for programming the Flash memory. SPI interface is connected by using the MOSI, MISO, CSB and CLK pins.

SPI interface can not be used for any application purposes.

7 Audio Interfaces

7.1 Audio Interface

The audio interface circuit consists of:

- Stereo audio CODEC
- Dual audio inputs and outputs
- A configurable PCM, I2S or SPDIF interface

Figure 13 outlines the functional blocks of the interface. The CODEC supports stereo playback and recording of audio signals at multiple sample rates with a resolution of 16-bit. The ADC and the DAC of the CODEC each contain two independent channels. Any ADC or DAC channel can be run at its own independent sample rate.

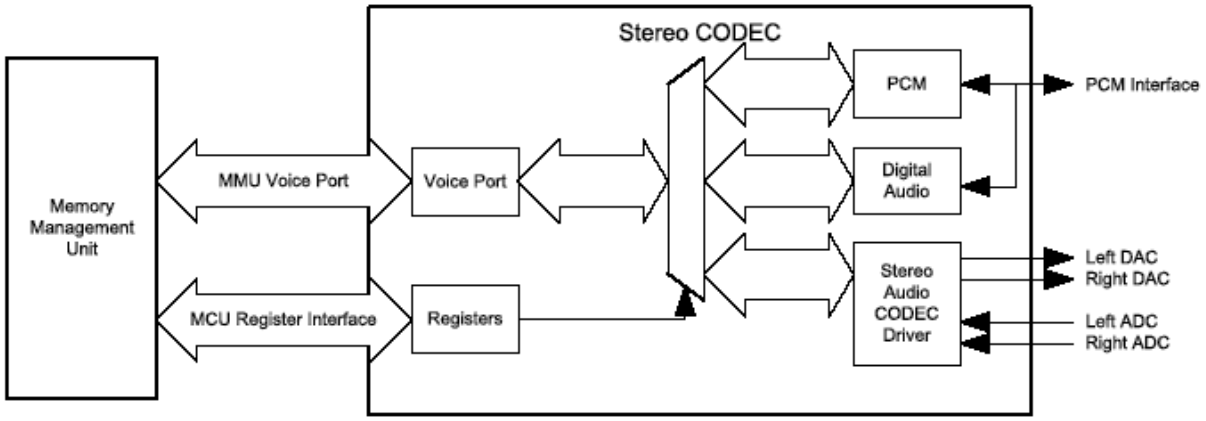

Figure 12: Audio interface

The interface for the digital audio bus shares the same pins as the PCM CODEC interface described in section 6.3, which means that each of the audio buses are mutually exclusive in their usage. Table 12 lists these alternative functions.

PCM Interface	SPDIF Interface	I2S Interface
PCM_OUT	SPDIF_OUT	SD_OUT
PCM_IN	SPDIF_IN	SD_IN
PCM_SYNC		WS
PCM_CLK		SCK

Table 12: Alternative functions of the digital audio bus interface on the PCM interface

7.1.1 Audio Input and Output

The audio input circuitry consists of a dual audio input that can be configured to be either single-ended or fully differential and programmed for either microphone or line input. It has an analogue and digital programmable gain stage for optimisation of different microphones.

Audio signals are very sensitive to noise caused by the Bluetooth radio and it is highly recommended to always use fully differential signals.

The audio output circuitry consists of a dual differential class A-B output stage.

7.2 Stereo Audio CODEC Interface

The main features of the interface are:

- Stereo and mono analogue input for voice band and audio band
- Stereo and mono analogue output for voice band and audio band
- Support for stereo digital audio bus standards such as I^2S
- Support for IEC-60958 standard stereo digital audio bus standards, e.g. S/PDIF and AES3/EBU
- Support for PCM interfaces including PCM master CODECs that require an external system clock

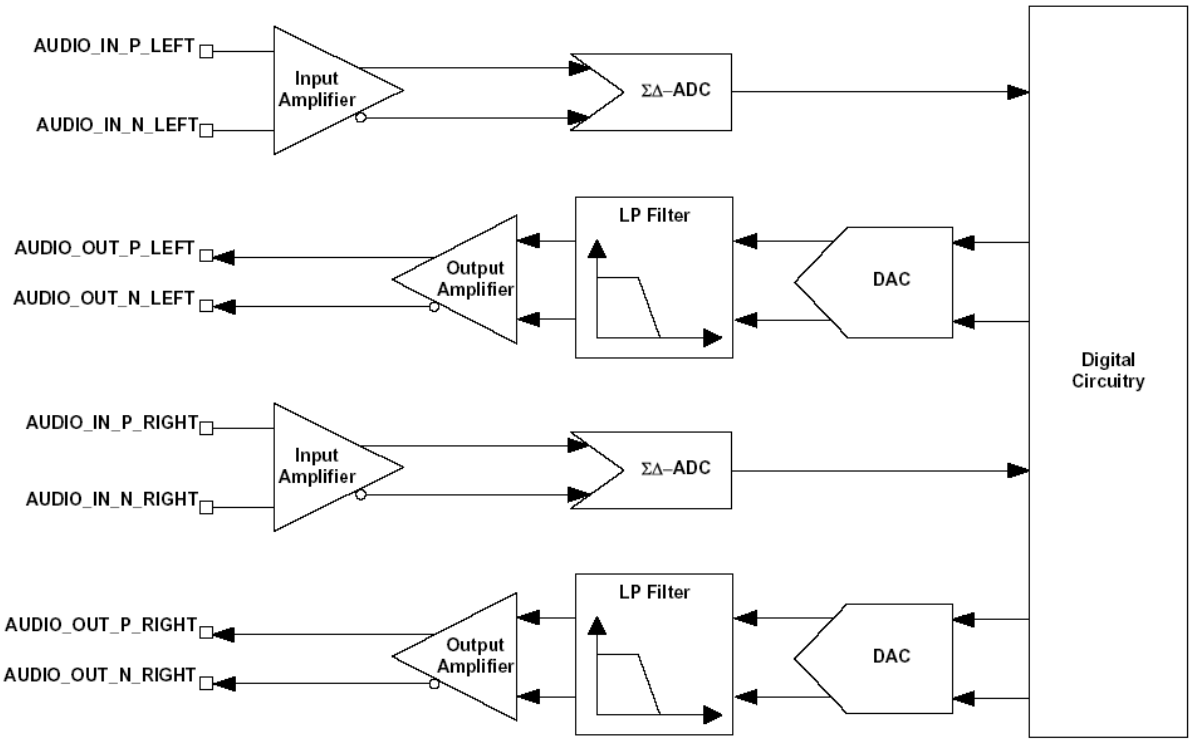

Figure 13: Stereo CODEC audio input and output stages

The stereo audio CODEC uses a fully differential architecture in the analogue signal path, which results in low noise sensitivity and good power supply rejection while effectively doubling the signal amplitude. It operates from a single power-supply of 1.5V and uses a minimum of external components.

7.2.1 ADC

The ADC consists of two second-order Sigma Delta converters allowing two separate channels that are identical in functionality, as shown in Figure 14.

Each ADC supports the following sample rates:

- 8kHz
- 11.025kHz
- 16kHz
- 22.05kHz
- 24kHz
- 32kHz
- 44.1kHz

The ADC contains two gain stages for each channel, an analogue and a digital gain stage. The digital gain stage has a programmable selection value in the range of 0 to 15 with the associated ADC gain settings summarised in Table 13. There is also a high resolution digital gain mode that allows the gain to be changed in 1/32dB steps. Please contact Bluegiga Technologies for more information.

Gain SelectionValue	ADC Digital Gain Setting (dB)
0	0
1	3.5
2	6
3	9.5
4	12
5	15.5
6	18
7	21.5
8	-24
9	-20.5
10	-18
11	-14.5
12	-12
13	-8.5
14	-6
15	-2.5

Table 13: ADC digital gain rate selection

The ADC analogue amplifier is a two-stage amplifier. The first stage of the analogue amplifier is responsible for selecting the correct gain for either microphone input or line input and, therefore, has two gain settings, one for the microphone and one for the line input. See section 6.2.5 and section 6.2.6 for details on the microphone and line inputs, respectively. In simple terms, the first stage amplifier has a selectable 24dB gain stage for the microphone and this creates the dual programmable gain required for the microphone or the line input. The equivalent block diagram for the two stages is shown in Figure 15.

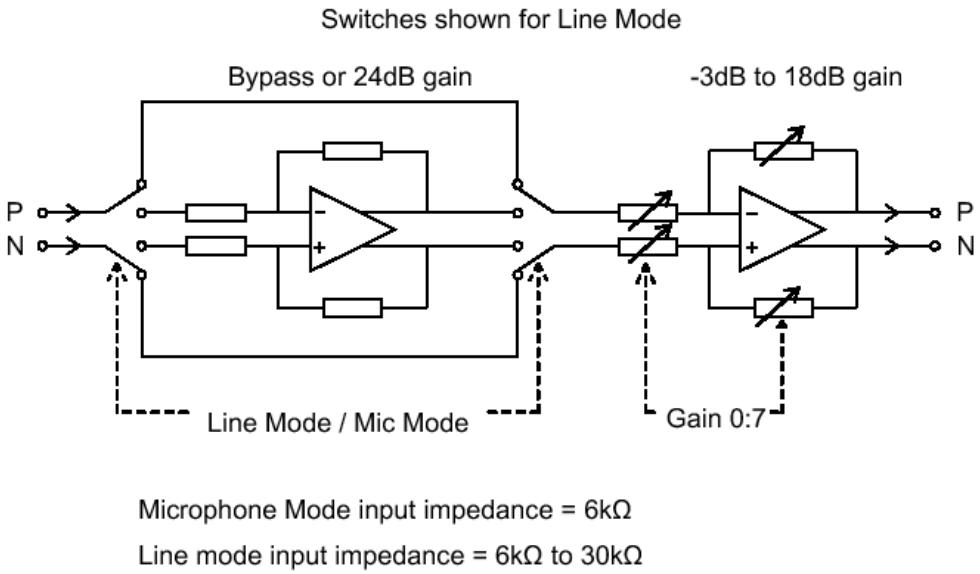

Figure 14: ADC analogue amplifier block diagram

The second stage of the analogue amplifier shown in Figure 15 has a programmable gain with seven individual 3dB steps. In simple terms, by combining the 24dB gain selection of the microphone input with the seven individual 3dB gain steps, the overall range of the analogue amplifier is approximately -3dB to 42dB in 3dB steps. The overall gain control of the ADC is controlled by a VM function. See iWRAP user guide how to set the gain using iWRAP commands.

7.2.2 DAC

The DAC consists of two third-order Sigma Delta converters allowing two separate channels that are identical in functionality as shown in Figure 14.

Each DAC supports the following samples rates:

- 8kHz
- 11.025kHz
- 16kHz
- 22.050kHz
- 24kHz
- 32kHz
- 44.1kHz
- 48kHz

See the iWRAP user guide how to set the sampling rate using iWRAP commands. The default setting for A2DP is 44.1 kHz and for HFP 8 kHz.

The DAC contains two gain stages for each channel: a digital and an analogue gain stage. The digital gain stage has a programmable selection value in the range of 0 to 15 with associated DAC gain settings. This is summarised in Table 14. There is also a high resolution digital gain mode that allows the gain to be changed in 1/32dB steps. Please contact Bluegiga Technologies for more information.

Gain Selection Value	ADC Digital Gain Setting (dB)
0	0
1	3.5
2	6
3	9.5
4	12
5	15.5
6	18
7	21.5
8	-24
9	-20.5

10	-18
11	-14.5
12	-12
13	-8.5
14	-6
15	-2.5

Table 14: DAC digital gain rate selection

The DAC analogue amplifier has a programmable gain with seven individual 3dB steps. The overall gain control of the DAC is controlled by a VM function. This setting is a combined function of the digital and analogue amplifier settings, therefore, for a 1V rms nominal digital output signal from the digital gain stage of the DAC, the following approximate output values of the analogue amplifier of the DAC can be expected:

Analogue Gain Setting	DAC Gain Setting (dB)
7	3
6	0
5	-3
4	-6
3	-9
2	-12
1	-15
0	-18

Table 15: DAC analogue gain rate selection

7.2.3 IEC 60958 Interface

The IEC 60958 interface is a digital audio interface that uses bi-phase coding to minimize the DC content of the transmitted signal and allows the receiver to decode the clock information from the transmitted signal. The IEC 60958 specification is based on the two industry standards AES/EBU and the Sony and Philips interface specification SPDIF. The interface is compatible with IEC 60958-1, IEC 60958-3 and IEC 60958-4.

The SPDIF interface signals are SPDIF_IN and SPDIF_OUT and are shared on the PCM interface pins. The input and output stages of the SPDIF pins can interface either to a 75Ω Coaxial cable with an RCA connector, see Figure 16, or there is an option to use an optical link that uses Toslink optical components, see Figure 17.

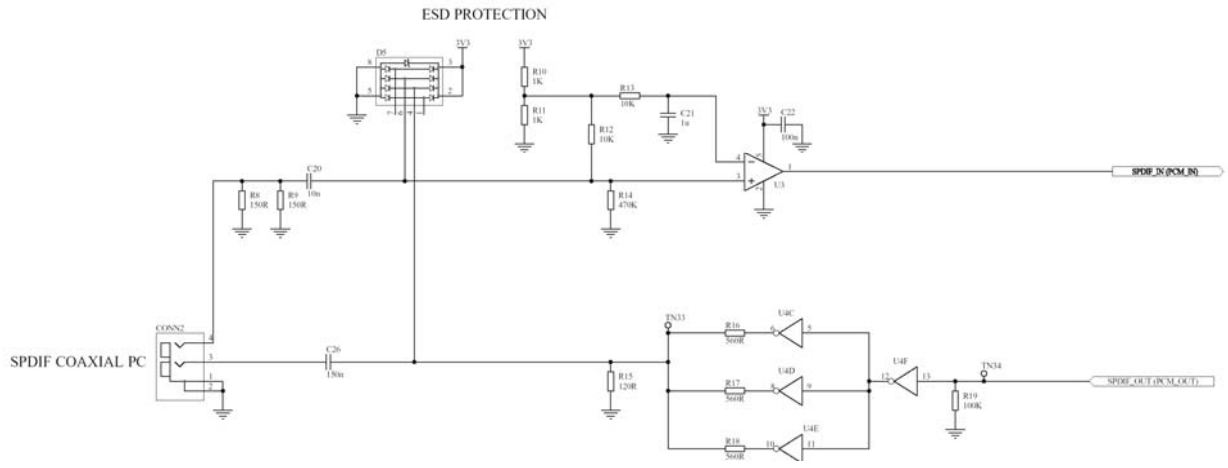

Figure 15: Example circuit for SPDIF interface (Co-Axial)

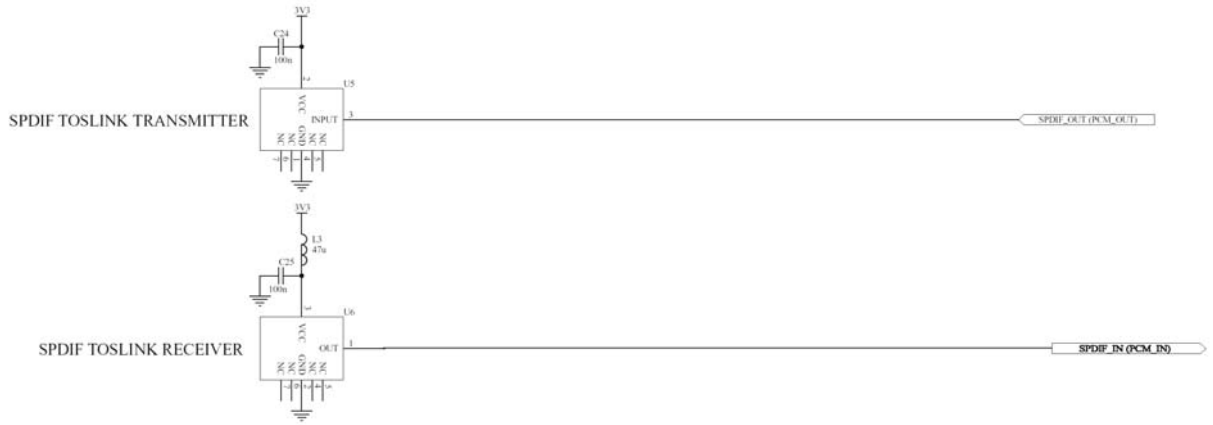

Figure 16: Example circuit for SPDIF interface (Optical)

7.2.4 Microphone Input

The audio-input is intended for use from 1μA@94dB SPL to about 10μA@94dB SPL. With biasing resistors R1 and R2 equal to 1kΩ, this requires microphones with sensitivity between about –40dBV and –60dBV.

The MIC_BIAS is like any voltage regulator and requires a minimum load to maintain regulation. The MIC_BIAS will maintain regulation within the limits 0.2 - 1.53 mA depending on the bias current setting. This means that if a microphone that sits below these limits is used, the microphone output must be pre-loaded with a large value resistor to ground.

MIC_BIAS line either bee used to directly drive bias current for the microphone, or as an enable signal for an external biasing regulator. The default setting for the bias current in WT32 is 0.2 mA and it is recommended to use an external low noise biasing regulator for the best noise performance. The recommended microphone biasing circuitry is shown in the figure 18.

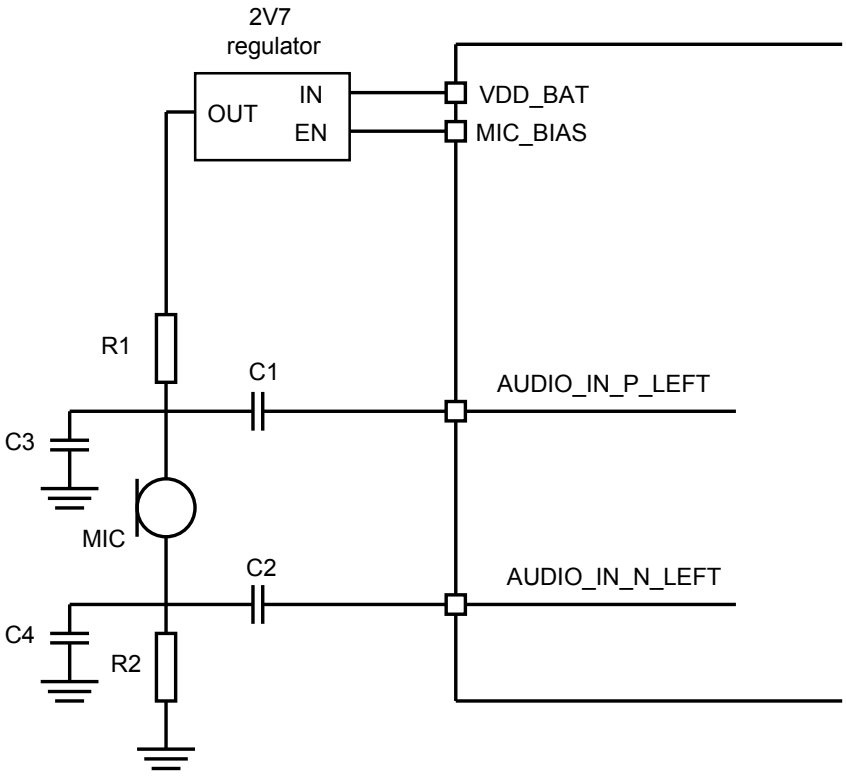

Figure 17: Recommended microphone biasing (left channel shown)

The input impedance at AUDIO_IN_N_LEFT, AUDIO_IN_P_LEFT, AUDIO_IN_N_RIGHT and AUDIO_IN_P_RIGHT is typically 6.0kΩ. C1 and C2 should be 150nF if bass roll-off is required to limit wind noise on the microphone. R1 sets the microphone load impedance and is normally in a range of 1 to 2 kΩ. R2, C3 and C4 improve the supply rejection by decoupling supply noise from the microphone. Values should be selected as required. R1 may be connected to a convenient supply, in which case the bias network is permanently enabled, or to the output of the biasing regulator which may be configured to provide bias only when the microphone is required.

The microphone bias provides a 4-bit programmable output voltage with a 4-bit programmable output current, shown in Table 16 and 17.

Output Step	Typical Voltage Level (V)
0	1.71
1	1.76
2	1.82
3	1.87
4	1.95
5	2.02
6	2.10
7	2.18
8	2.32
9	2.43
10	2.56
11	2.69
12	2.9
13	3.08
14	3.33
15	3.57

Table 16: Voltage Output Step

Output Step	Typical Current (mA)
0	0.199
1	0.284
2	0.336
3	0.419
4	0.478
5	0.529
6	0.613
7	0.672
8	0.754
9	0.809
10	0.862
11	0.948
12	1.004
13	1.091
14	1.142
15	1.229

Table 17: Current Output Step

7.2.5 Line Input

If the input analogue gain is set to less than 21dB, WT32 automatically selects line input mode. In line input mode, the first stage of the amplifier is automatically disabled, providing additional power saving. In line input mode, the input impedance varies from 6kΩ-30kΩ, depending on the volume setting. Figure 19 and Figure 20 show two circuits for line input operation and show connections for either differential or single-ended inputs.

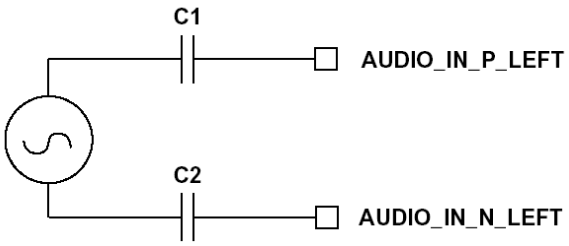

Figure 18: Differential input (left channel shown)

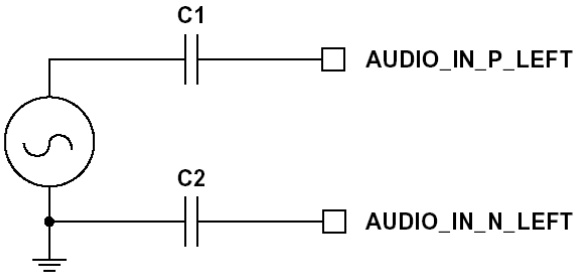

Figure 19: Single ended input (left channel shown)

7.2.6 Output Stage

The output digital circuitry converts the signal from 16-bit per sample, linear PCM of variable sampling frequency to a 2Mbits/s 5-bit multi-bit bit stream, which is fed into the analogue output circuitry.

The output circuit is comprised of a digital to analogue converter with gain setting and an output amplifier. Its class AB output stage is capable of driving a signal on both channels of up to 2V pk-pk differential into a load of 16Ω. The output is available as a differential signal between AUDIO_OUT_N_LEFT and AUDIO_OUT_P_LEFT for the left channel, as Figure 20 shows; and between AUDIO_OUT_N_RIGHT and AUDIO_OUT_P_RIGHT for the right channel. The output is capable of driving a speaker directly if its impedance is at least 8Ω at reduced output swing and if only one channel is connected or an external regulator is used.

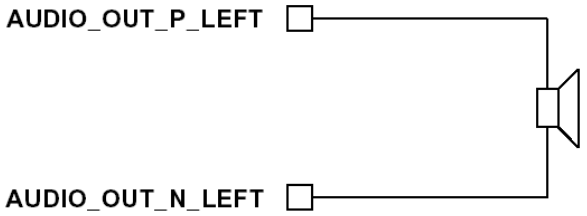

Figure 20: Speaker output (left channel shown)

The analogue gain of the output stage is controlled by a 3-bit programmable resistive divider, which sets the gain in steps of approximately 3dB.

The multi-bit bit stream from the digital circuitry is low pass filtered by a third order filter with a pole at 20kHz. The signal is then amplified in the fully differential output stage, which has a gain bandwidth of typically 1MHz.

7.2.6.1 Mono Operation

Mono operation is a single-channel operation of the stereo CODEC. The left channel represents the single mono channel for audio in and audio out. In mono operation, the right channel is an auxilliary mono channel that may be used in dual mono channel operation.

With single mono, the power consumption can be reduced by disabling the other channel.

7.2.6.2 Side Tone

In some applications, it is necessary to implement a side tone. This involves feeding an attenuated version of the microphone signal to the earpiece. The BlueCore5.Multimedia External CODEC contains a side tone circuitry to do this. The side tone hardware is configured through the following PS Keys:

- PSKEY_SIDE_TONE_ENABLE
- PSKEY_SIDE_TONE_GAIN
- PSKEY_SIDE_TONE_AFTER_ADC
- PSKEY_SIDE_TONE_AFTER_DAC

7.2.6.3 Integrated Digital Filter

TBA

7.3 Digital Audio Interface (I2S)

The digital audio interface supports the industry standard formats for I^2S, left-justified (LJ) or right-justified(RJ). The interface shares the same pins as the PCM interface, which means that each audio bus is mutually exclusive in its usage. Table 18 lists these alternative functions. Figure 22 shows the timing diagram.

PCM Interface	I2S Interface
PCM_OUT	SD_OUT
PCM_IN	SD_IN
PCM_SYNC	WS
PCM_CLK	SCK

Table 18: Alternative Functions of the Digital Audio Bus Interface on the PCM Interface

Table 19 describes the values for the PS Key (PSKEY_DIGITAL_AUDIO_CONFIG) that is used to set-up the digital audio interface. For example, to configure an I^2S interface with 16-bit SD data set PSKEY_DIGITAL_CONFIG to 0x0406.

Bit	Mask	Name	Description
D[0]	0x0001	CONFIG_JUSTIFY_FORMAT	0 for left justified, 1 for right justified
D[1]	0x0002	CONFIG_LEFT_JUSTIFY_DELAY	For left justified formats: 0 is MSB of SD data occurs in the first SCLK period following WS transition. 1 is MSB of SD data occurs in the second SCLK period.
D[2]	0x0004	CONFIG_CHANNEL_POLARITY	For 0, SD data is left channel when WS is high. For 1 SD data is right channel.
D[3]	0x0008	CONFIG_AUDIO_ATTEN_EN	For 0, 17 bit SD data is rounded down to 16 bits. For 1, the audio attenuation defined in CONFIG_AUDIO_ATTEN is applied over 24 bits with saturated rounding. Requires CONFIG_16_BIT_CROP_EN to be 0.
D[7:4]	0x00F0	CONFIG_AUDIO_ATTEN	Attenuation in 6 dB steps.
D[9:8]	0x0300	CONFIG_JUSTIFY_RESOLUTION	Resolution of data on SD_IN, 00=16 bit, 01=20 bit, 10=24 bit, 11=Reserved. This is required for right justified format and with left justified LSB first.
D[10]	0x0400	CONFIG_16_BIT_CROP_EN	For 0, 17 bit SD_IN data is rounded down to 16 bits. For 1 only the most significant 16 bits of data are received.

Table 19: PSKEY_DIGITAL_AUDIO_CONFIG

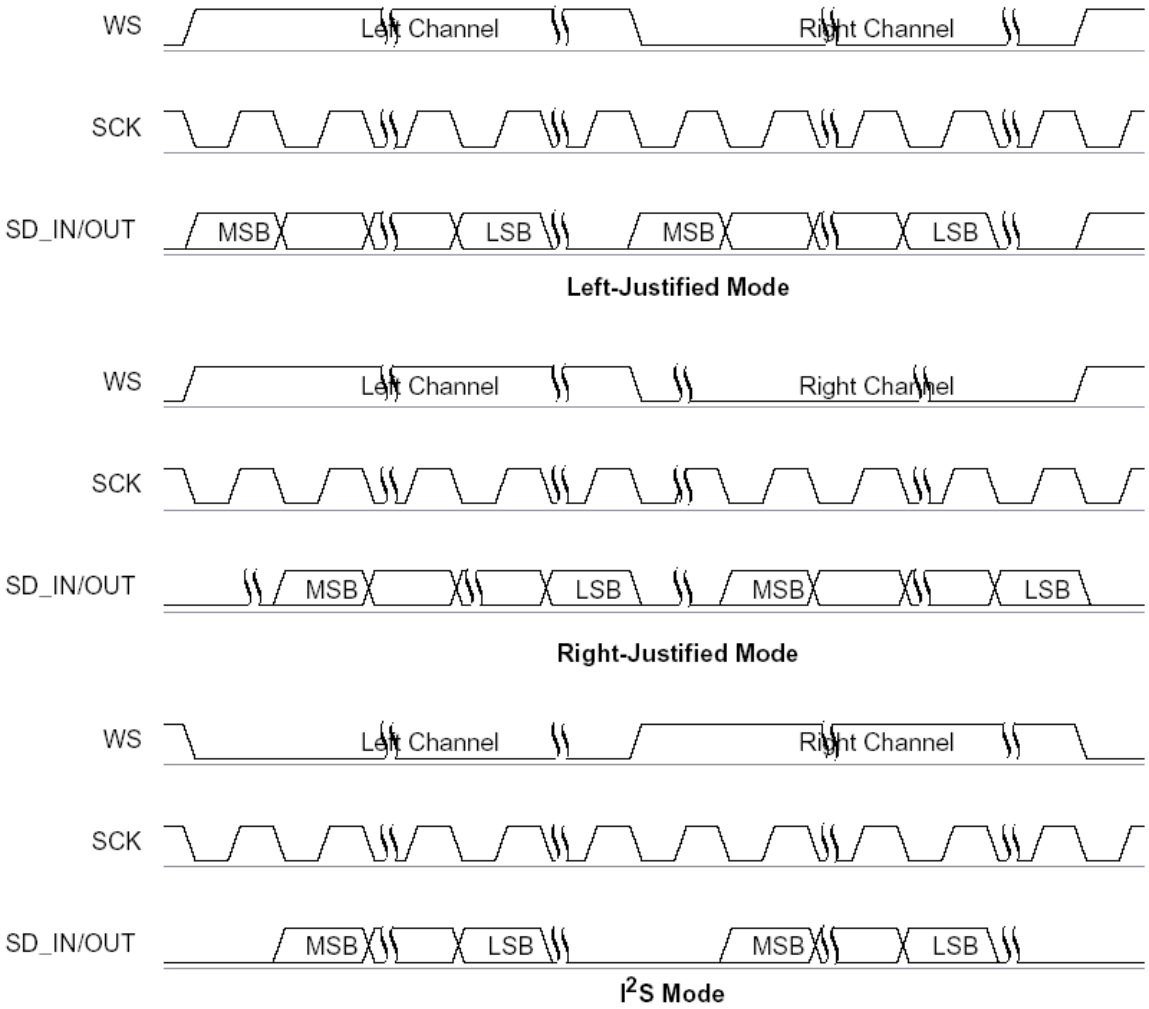

Figure 21: Digital audio interface modes

The internal representation of audio samples within BlueCore5.Multimedia External is 16-bit and data on SD_OUT is limited to 16-bit per channel.

Symbol	Parameter	Min	Typ	Max	Unit
-	SCK Frequency	-	-	6.2	MHz
-	WS Frequency	-	-	96	kHz
t_{ch}	SCK high time	80	-	-	ns
t_{cl}	SCK low time	80	-	-	ns
t_{opd}	SCK to SD_OUT delay	-	-	20	ns
t_{ssu}	WS to SCK set-up time	20	-	-	ns
t_{sh}	WS to SCK hold time	20	-	-	ns
t_{isu}	SD_IN to SCK set-up time	20	-	-	ns
t_{ih}	SD_IN to SCK hold time	20	-	-	ns

Table 20: Digital audio interface slave timing

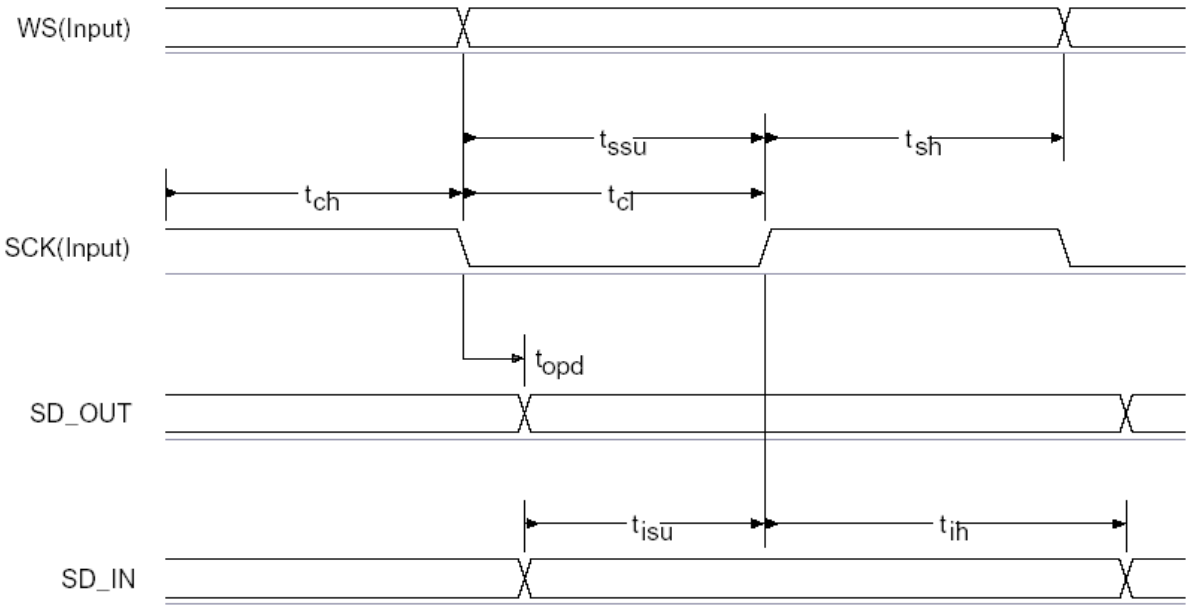

Figure 22: Digital audio interface slave timing

Symbol	Parameter	Min	Typ	Max	Unit
-	SCK Frequency	-	-	6.2	MHz
-	WS Frequency	-	-	96	kHz
t_{opd}	SCK to SD_OUT delay	-	-	20	ns
t_{spd}	SCK to WS delay	-	-	-	ns
t_{isu}	SD_IN to SCK set-up time	20	-	-	ns
t_{ih}	SD_IN to SCK hold time	20	-	-	ns

Table 21: Digital audio interface master timing

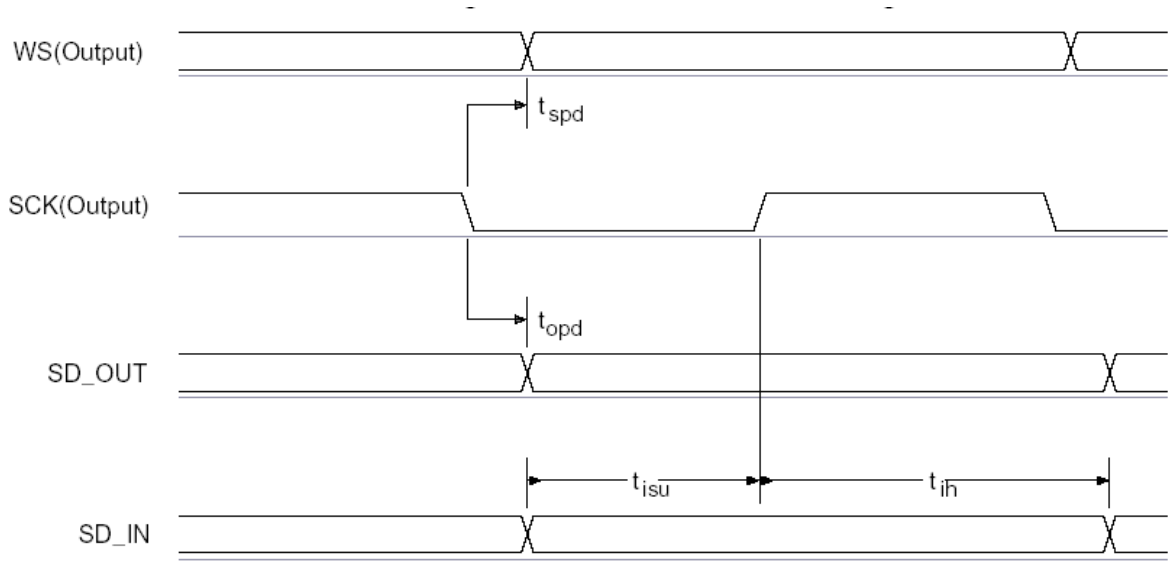

Figure 23: Digital audio interface master timing

7.4 PCM Interface

Pulse Code Modulation (PCM) is a standard method used to digitize audio (particularly voice) patterns for transmission over digital communication channels. Through its PCM interface, WT32 has hardware support for continual transmission and reception of PCM data, thus reducing processor overhead for wireless headset applications. WT32 offers a bi directional digital audio interface that routes directly into the baseband layer of the on-chip firmware. It does not pass through the HCI protocol layer.

Hardware on WT32 allows the data to be sent to and received from a SCO connection. Up to three SCO connections can be supported by the PCM interface at a time.

WT32 can operate as the PCM interface Master generating an output clock of 128, 256 or 512kHz. When configured as PCM interface slave, it can operate with an input clock up to 2048kHz. WT32 is compatible with a variety of clock formats, including Long Frame Sync, Short Frame Sync and GCI timing environments.

WT32 supports 13 or 16-bit linear, 8-bit μ-law or A-law companded sample formats at 8ksamples/s and can receive and transmit on any selection of three of the first four slots following PCM_SYNC. The PCM configuration options are enabled by setting the PS Key PS KEY_PCM_CONFIG32 (0x1b3). WT32 interfaces directly to PCM audio devices including the following:

- Qualcomm MSM 3000 series and MSM 5000 series CDMA baseband devices
- OKI MSM7705 four channel A-law and μ-law CODEC
- Motorola MC145481 8-bit A-law and μ-law CODEC
- Motorola MC145483 13-bit linear CODEC
- STW 5093 and 5094 14-bit linear CODECs
- WT32 is also compatible with the Motorola SSI™ interface

7.4.1 PCM Interface Master/Slave

When configured as the Master of the PCM interface, WT32 generates PCM_CLK and PCM_SYNC.

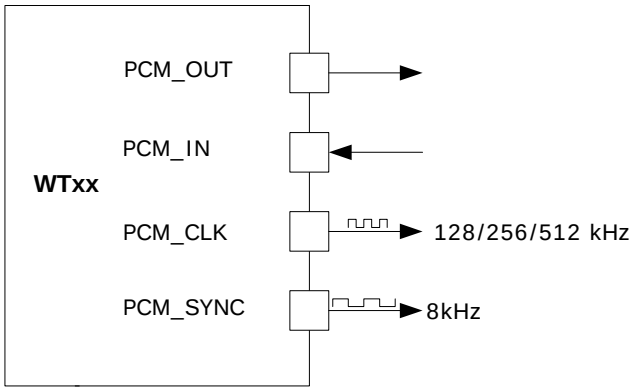

Figure 24: WT32 as PCM master

When configured as the Slave of the PCM interface, WT32 accepts PCM_CLK and PCM_SYNC. PCM_CLK rates up to 2048kHz are accepted.

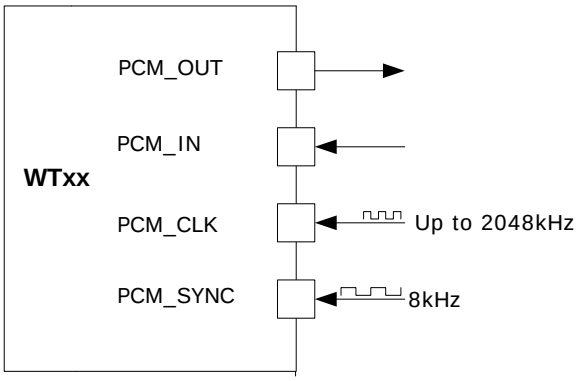

Figure 25: WT32 as PCM slave

7.4.2 Long Frame Sync

Long Frame Sync is the name given to a clocking format that controls the transfer of PCM data words or samples. In Long Frame Sync, the rising edge of PCM_SYNC indicates the start of the PCM word. When WT32 is configured as PCM Master, generating PCM_SYNC and PCM_CLK, then PCM_SYNC is 8-bits long. When BlueCore4-External is configured as PCM Slave, PCM_SYNC may be from two consecutive falling edges of PCM_CLK to half the PCM_SYNC rate, i.e. 62.5µs long.

WT32 samples PCM_IN on the falling edge of PCM_CLK and transmits PCM_OUT on the rising edge. PCM_OUT may be configured to be high impedance on the falling edge of PCM_CLK in the LSB position or on the rising edge.

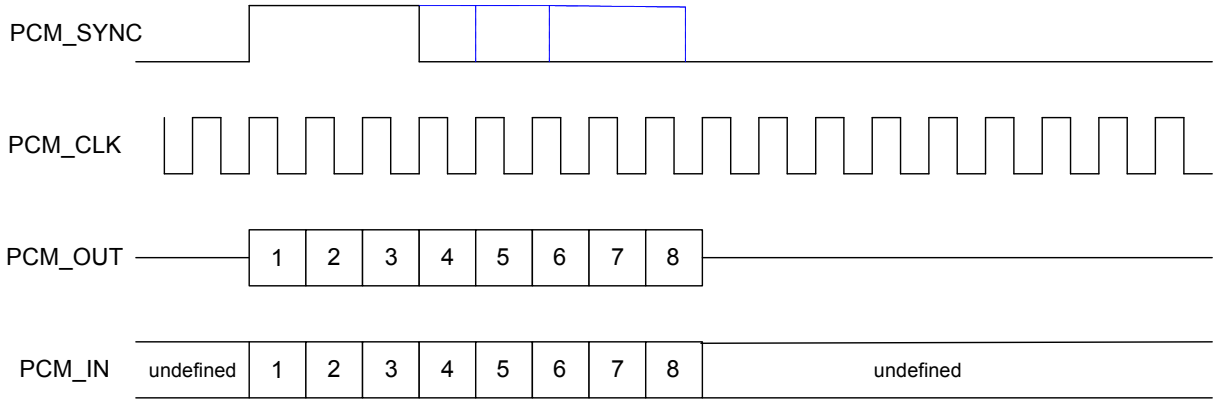

Figure 26: Long frame sync (shown with 8-bit companded sample)

7.4.3 Short Frame Sync

In Short Frame Sync, the falling edge of PCM_SYNC indicates the start of the PCM word. PCM_SYNC is always one clock cycle long.

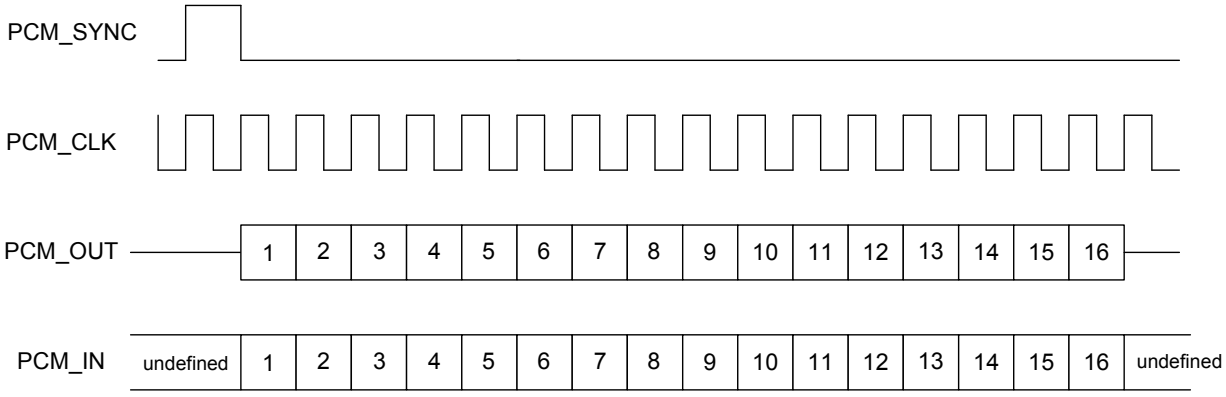

Figure 27: Short frame sync (shown with 16-bit companded sample)

As with Long Frame Sync, WT32 samples PCM_IN on the falling edge of PCM_CLK and transmits PCM_OUT on the rising edge. PCM_OUT may be configured to be high impedance on the falling edge of PCM_CLK in the LSB position or on the rising edge.

7.4.4 Multi Slot Operation

More than one SCO connection over the PCM interface is supported using multiple slots. Up to three SCO connections can be carried over any of the first four slots.

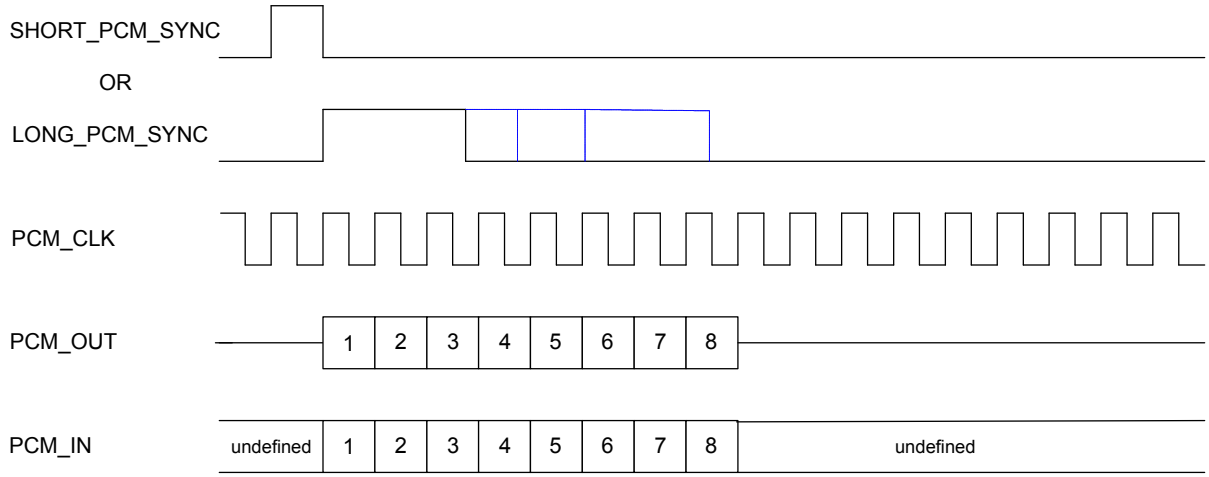

Figure 28: Multi slot operation with two slots and 8-bit companded samples

7.4.5 GCI Interface

WT32 is compatible with the General Circuit Interface, a standard synchronous 2B+D ISDN timing interface. The two 64Kbps B channels can be accessed when this mode is configured.

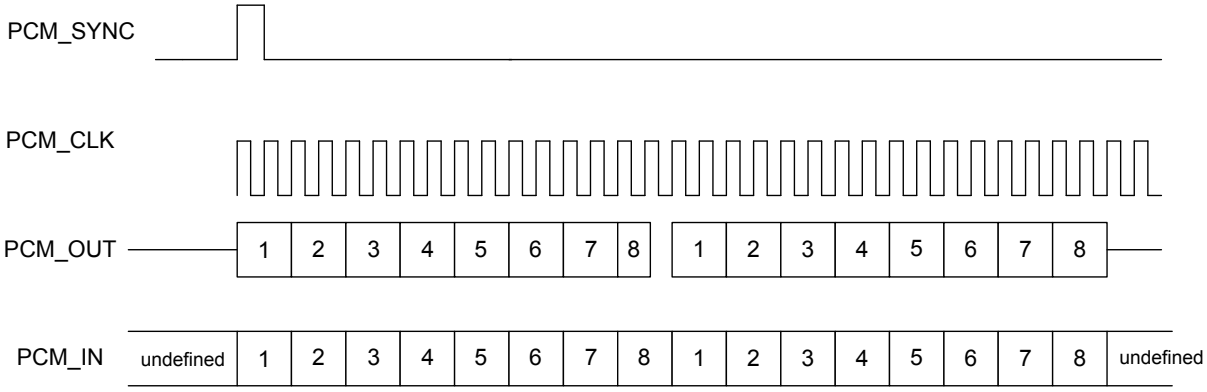

Figure 29: GCI interface

The start of frame is indicated by the rising edge of PCM_SYNC and runs at 8kHz. With WT32 in Slave mode, the frequency of PCM_CLK can be up to 4.096MHz.

7.4.6 Slots and Sample Formats

WT32 can receive and transmit on any selection of the first four slots following each sync pulse. Slot durations can be either 8 or 16 clock cycles. Durations of 8 clock cycles may only be used with 8-bit sample formats. Durations of 16 clocks may be used with 8, 13 or 16-bit sample formats.

WT32 supports 13-bit linear, 16-bit linear and 8-bit μ-law or A-law sample formats. The sample rate is 8ksamples/s. The bit order may be little or big Endian. When 16-bit slots are used, the 3 or 8 unused bits in each slot may be filled with sign extension, padded with zeros or a programmable 3-bit audio attenuation compatible with some Motorola CODECs.

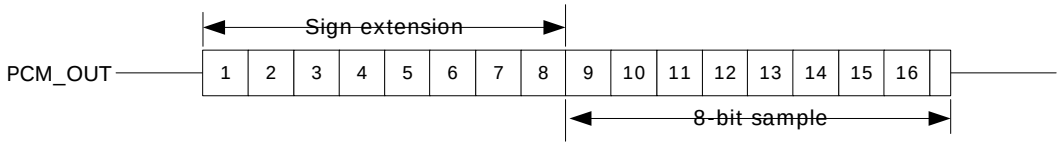

Figure 30: 16-bit slot with 8-bit companded sample and sign extension selected

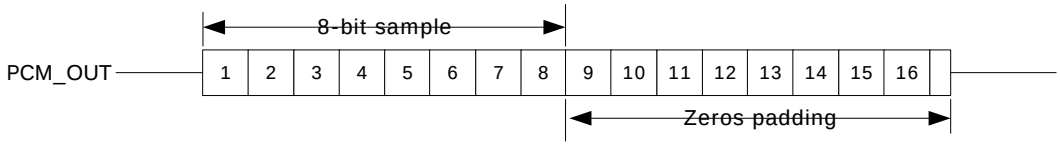

Figure 31: 16-bit slot with 8-bit companded sample and zeros padding selected

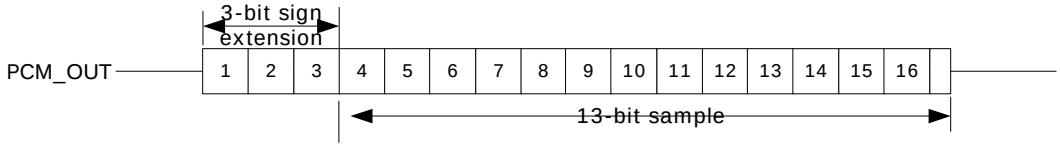

Figure 32: 16-bit slot with 13-bit linear sample and sign extension selected

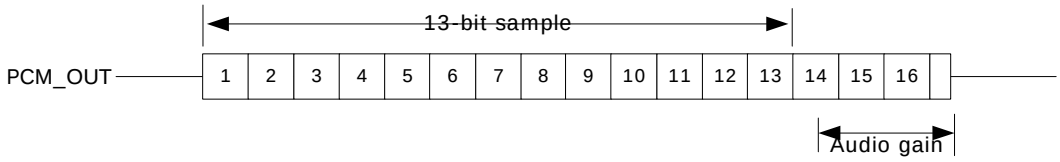

Figure 33: 16-bit slot with 13-bit linear sample and audio gain selected

7.4.7 Additional Features

WT32 has a mute facility that forces PCM_OUT to be 0. In Master mode, PCM_SYNC may also be forced to 0 while keeping PCM_CLK running, which some CODECS use to control power down.

7.4.8 PCM CLK and SYNC Generation

WT32 has two methods of generating PCM_CLK and PCM_SYNC in master mode. The first is generating these signals by Direct Digital Synthesis (DDS) from BlueCore5 Multimedia External internal 4MHz clock. Using this mode limits PCM_CLK to 128, 256 or 512kHz and PCM_SYNC to 8kHz. The second is generating PCM_CLK and PCM_SYNC by DDS from an internal 48MHz clock (which allows a greater range of frequencies to be generated with low jitter, but consumes more power). The second method is selected by setting bit 48M_PCM_CLK_GEN_EN in PSKEY_PCM_CONFIG32. When in this mode and with long frame sync, the length of PCM_SYNC can be either 8 or 16 cycles of PCM_CLK, determined by LONG_LENGTH_SYNC_EN in PSKEY_PCM_CONFIG32.

Equation 3 describes PCM_CLK frequency when being generated using the internal 48MHz clock:

$$f = \frac{CNT_RATE}{CNT_LIMIT} \times 24MHz$$

Equation 3: PCM_CLK frequency when being generated using the internal 48 MHz clock

The frequency of PCM_SYNC relative to PCM_CLK can be set using Equation 4

$$f = \frac{PCM_CLK}{SYNC_LIMIT \times 8}$$

Equation 4: PCM_SYNC frequency relative to PCM_CLK

CNT_RATE, CNT_LIMIT and SYNC_LIMIT are set using PSKEY_PCM_LOW_JITTER_CONFIG. As an example, to generate PCM_CLK at 512kHz with PCM_SYNC at 8kHz, set PSKEY_PCM_LOW_JITTER_CONFIG to 0x08080177.

7.4.9 PCM Configuration

The PCM configuration is set by using two PS Keys, PSKEY_PCM_CONFIG32 and PSKEY_PCM_LOW_JITTER_CONFIG. The following tables detail these PS Keys. The default for PSKEY_PCM_CONFIG32 key is 0x00800000, i.e. first slot following sync is active, 13-bit linear voice format, long frame sync and interface master generating 256kHz PCM_CLK from 4MHz internal clock with no tri-stating of PCM_OUT. PSKEY_PCM_LOW_JITTER_CONFIG is described in Table 23.

Name	Bit position	Description
-	0	Set to 0
SLAVE MODE EN	1	0 selects Master mode with internal generation of PCM_CLK and PCM_SYNC. 1 selects Slave mode requiring externally generated PCM_CLK and PCM_SYNC. This should be set to 1 if 48M_PCM_CLK_GEN_EN (bit 11) is set.
SHORT SYNC EN	2	0 selects long frame sync (rising edge indicates start of frame), 1 selects short frame sync (falling edge indicates start of frame).
-	3	Set to 0
SIGN EXTENDED EN	4	0 selects padding of 8 or 13-bit voice sample into a 16- bit slot by inserting extra LSBs, 1 selects sign extension. When padding is selected with 3-bit voice sample, the 3 padding bits are the audio gain setting; with 8-bit samples the 8 padding bits are zeroes.
LSB FIRST EN	5	0 transmits and receives voice samples MSB first, 1 uses LSB first.
TX TRISTATE EN	6	0 drives PCM_OUT continuously, 1 tri-states PCM_OUT immediately after the falling edge of PCM_CLK in the last bit of an active slot, assuming the next slot is not active.
TX TRISTATE RISING EDGE EN	7	0 tristates PCM_OUT immediately after the falling edge of PCM_CLK in the last bit of an active slot, assuming the next slot is also not active. 1 tristates PCM_OUT after the rising edge of PCM_CLK.
SYNC SUPPRESS EN	8	0 enables PCM_SYNC output when master, 1 suppresses PCM_SYNC whilst keeping PCM_CLK running. Some CODECS utilize this to enter a low power state.
GCI MODE EN	9	1 enables GCI mode.
MUTE EN	10	1 forces PCM_OUT to 0.
48M PCM CLK GEN EN	11	0 sets PCM_CLK and PCM_SYNC generation via DDS from internal 4 MHz clock, as for BlueCore4-External. 1 sets PCM_CLK and PCM_SYNC generation via DDS from internal 48 MHz clock.
LONG LENGTH SYNC EN	12	0 sets PCM_SYNC length to 8 PCM_CLK cycles and 1 sets length to 16 PCM_CLK cycles. Only applies for long frame sync and with 48M_PCM_CLK_GEN_EN set to 1.
-	[20:16]	Set to 0b00000.
MASTER CLK RATE	[22:21]	Selects 128 (0b01), 256 (0b00), 512 (0b10) kHz PCM_CLK frequency when master and 48M_PCM_CLK_GEN_EN (bit 11) is low.

Table 22: PSKEY_PCM_CONFIG32 description

Name	Bit position	Description
CNT LIMIT	[12:0]	Sets PCM_CLK counter limit
CNT RATE	[23:16]	Sets PCM_CLK count rate.
SYNC LIMIT	[31:24]	Sets PCM_SYNC division relative to PCM_CLK.

Table 23: PSKEY_PCM_LOW_JITTER_CONFIG Description

8 I/O Parallel Ports

The Parallel Input Output (PIO) Port is a general-purpose I/O interface to WT32. The port consists of eleven programmable, bi-directional I/O lines, PIO[10:0]. Programmable I/O lines can be accessed either through an embedded application running on WT32 or through private channel or manufacturer-specific HCI commands.

All PIO lines are configured as inputs with weak pull downs at reset.

PIO[2] / USB_PULL_UP (1)

The function depends on whether WT32 is a USB or UART capable version. On UART versions, this terminal is a programmable I/O. On USB versions, it can drive a pull-up resistor on USB_D+. For applications using external RAM, this terminal may be programmed for chip select.

PIO[3] / USB_WAKE_UP (1)

On UART versions of WT32, this terminal is a programmable I/O. On USB versions, its function is selected by setting the Persistent Store Key PSKEY_USB_PIO_WAKEUP (0x2cf) either as a programmable I/O or as a USB_WAKE_UP function.

PIO[4] / USB_ON (1)

On UART versions of WT32, this terminal is a programmable I/O. On USB versions, the USB_ON function is also selectable.

PIO[5] / USB_DETACH (1)

On UART versions of WT32, this terminal is a programmable I/O. On USB versions, the USB_DETACH function is also selectable.

PIO[6] / CLK_REQ

Function is determined by Persistent Store Keys. Using PSKEY_CLOCK_REQUEST_ENABLE, (0x246) this terminal can be configured to be low when WT32 is in deep sleep and high when a clock is required. The clock must be supplied within 4ms of the rising edge of PIO[6] to avoid losing timing accuracy in certain Bluetooth operating modes.

PIO[7]

Programmable I/O terminal.

PIO[8]

Programmable I/O terminal.

PIO[9]

Programmable I/O terminal.

PIO[10]

Programmable I/O terminal.

9 Software Stacks

WT32 is supplied with Bluetooth v2.0 + EDR compliant stack firmware, which runs on the internal RISC microcontroller.

The WT32 software architecture allows Bluetooth processing and the application program to be shared in different ways between the internal RISC microcontroller and an external host processor (if any). The upper layers of the Bluetooth stack (above HCI) can be run either on-chip or on the host processor.

9.1 iWRAP Stack

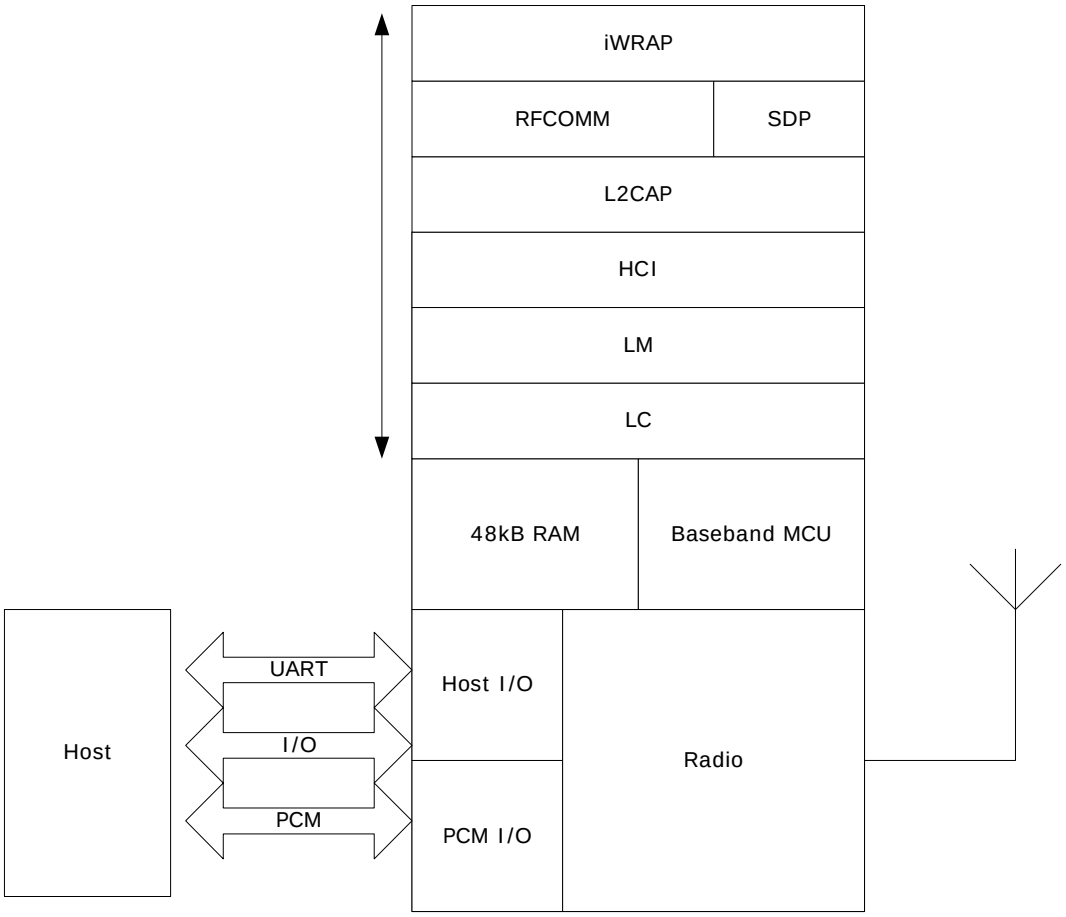

Figure 34: iWRAP Stack

In figure 35 above, the iWRAP software solution is described. In this version of the stack firmware shown, no host processor is required to run the Bluetooth protocol stack. All software layers, including application software, run on the internal RISC processor in a protected user software execution environment known as a Virtual Machine (VM).

The host processor interfaces to iWRAP software through one or more of the physical interfaces, which are also shown in the figure 35. The most common interfacing is done through the UART interface using the ASCII commands supported by the iWRAP software. With these ASCII commands, the user can access Bluetooth functionality without paying any attention to the complexity, which lies in the Bluetooth protocol stack.

The user may write application code to run on the host processor to control iWRAP software by using ASCII commands and to develop Bluetooth powered applications.

Notes:

More details of iWRAP software and its features can be found from *iWRAP User Guide*, which can be downloaded from www.bluegiga.com.

9.2 RFCOMM Stack

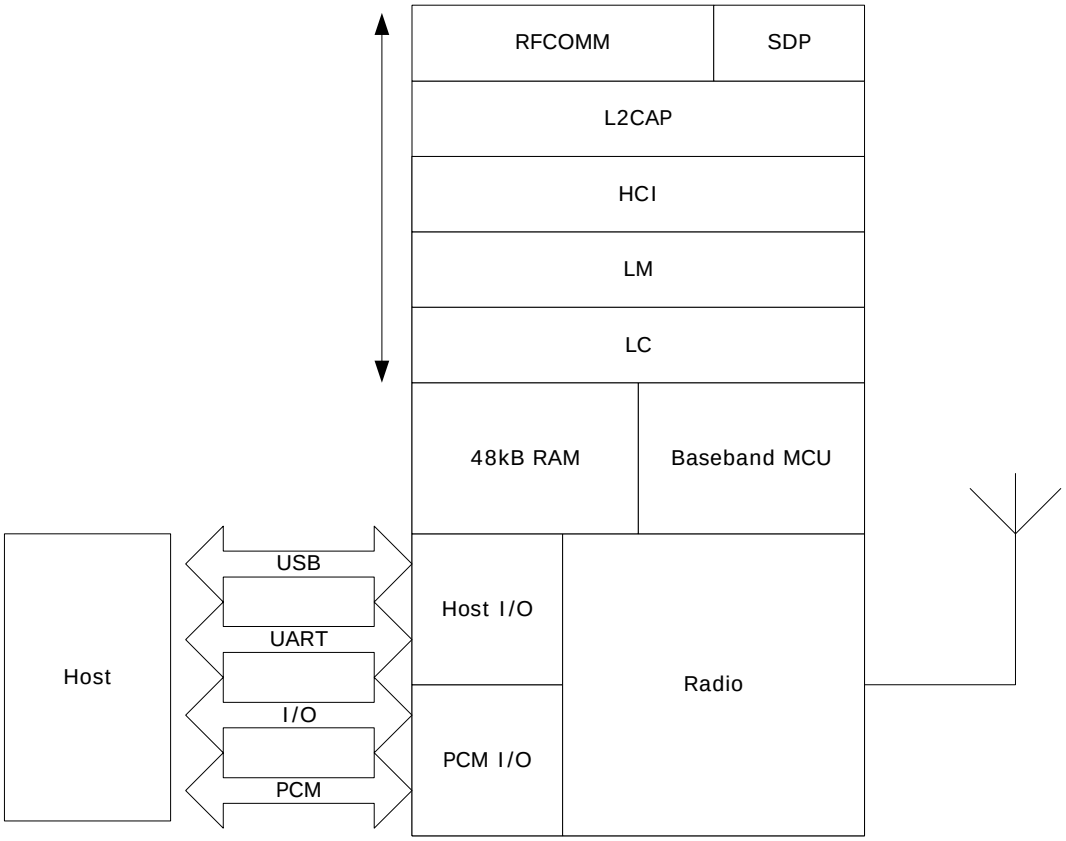

Figure 35: WRAP THOR RFCOMM stack

In the version of the firmware shown in Figure 37, the upper layers of the Bluetooth stack up to RFCOMM are run on-chip. This reduces host-side software and hardware requirements at the expense of some of the power and flexibility of the HCI only stack.

Features of RFCOMM Stack

Interfaces to Host:

- RFCOMM, an RS-232 serial cable emulation protocol
- SDP, a service database look-up protocol

Connectivity:

- Maximum number of active slaves: 3
- Maximum number of simultaneous active ACL connections: 3
- Maximum number of simultaneous active SCO connections: 3
- Data Rate: up to 350kbps[1]

Security:

- Full support for all Bluetooth security features up to and including strong (128-bit)
- encryption.

Power Saving:

- Full support for all Bluetooth power saving modes (Park, Sniff and Hold).

Data Integrity:

- CQDDR increases the effective data rate in noisy environments.
- RSSI used to minimize interference to other radio devices using the ISM band.

Notes:

The data rate is with respect to WT32 with basic data rate packets.

9.3 VM Stack

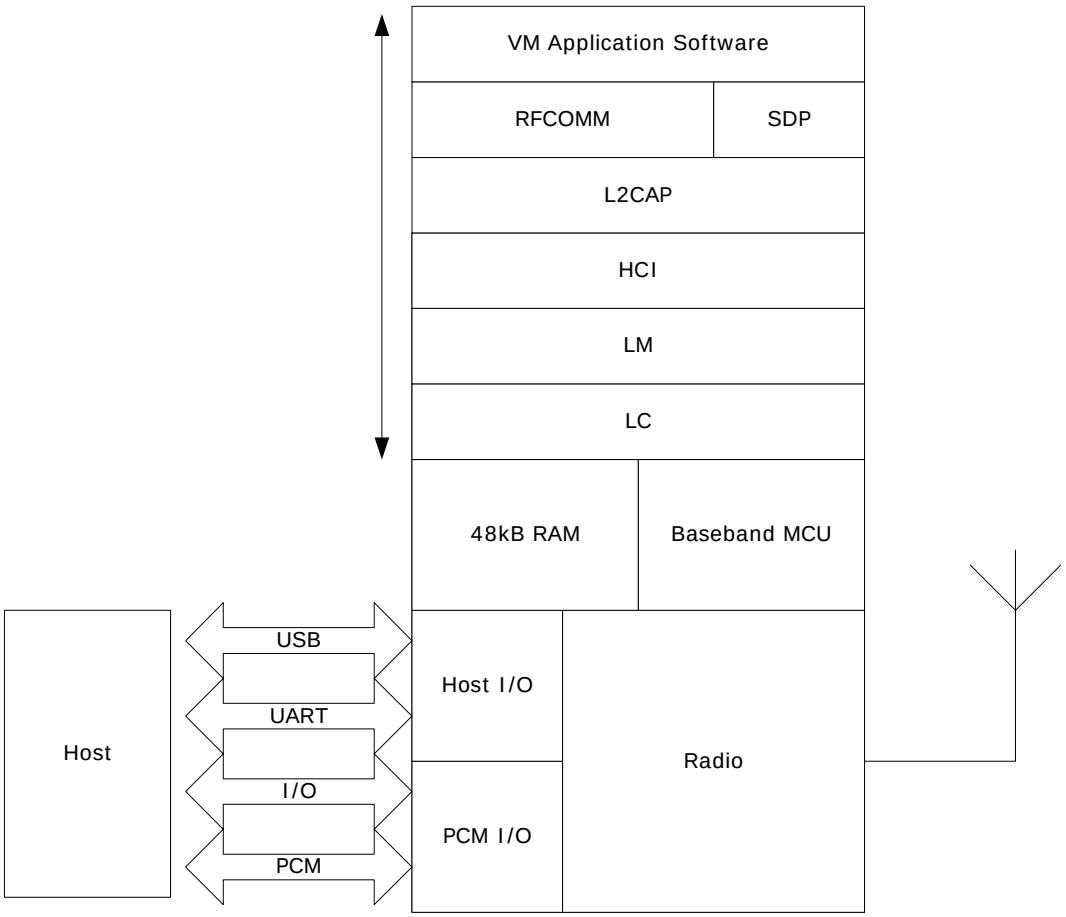

Figure 36: WRAP THOR VM Stack

The version of the stack firmware shown in figure 38 requires no host processor (but can use a host processor for debugging etc.). All software layers, including application software, run on the internal RISC processor in a protected user software execution environment known as a Virtual Machine (VM).

The user may write custom application code to run on the BlueCore VM using BlueLab™ software development kit (SDK) supplied with the Casira development kit, available separately from Bluegiga or directly form CSR. This code will then execute alongside the main WRAP THOR firmware. The user is able to make calls to the WRAP THOR firmware for various operations. WRAP THOR firmware is not equal to iWRAP firmware, which on the contrary does not allow users to run their own firmware in the module.

The execution environment is structured so that the user application does not adversely affect the main software routines, thus ensuring that the Bluetooth stack software component does not need re-qualification when the application is changed.

Using the VM and the BlueLab SDK, the user is able to develop applications such as a cordless headset or other profiles without the requirement of a host controller. BlueLab is supplied with example code including a full implementation of the headset profile.

Notes:

Sample applications to control PIO lines can also be written with BlueLab SDK and the VM for the HCI stack.

Software Development

WT32 Evaluation Kits are available to allow the evaluation of the WT32 hardware and software as well as a CSR BlueLab toolkit for developing on-chip and host software.

10 Enhanced Data Rate

EDR has been introduced to provide 2x and optionally 3x data rates with minimal disruption to higher layers of the Bluetooth stack. CSR supports both of the new data rates, with WT32. WT32 is compliant with revision v2.0.E.2 of the specification.

10.1 Enhanced Data Rate Baseband

At the baseband level, EDR uses the same 1.6kHz slot rate as basic data rate and therefore the packets can be 1, 3, or 5 slots long as per the basic data rate. Where EDR differs from the basic data rate is that in the same 1MHz symbol rate, 2 or 3 bits are used per symbol, compared to 1bit per symbol used by the basic data rate. To achieve the increase in number of bits symbol, two new modulation schemes have been introduced as summarized in Table 24 presented below and the modulation schemes are explained in the further sections.

Scheme	Bits per symbol	Modulation
Basic data rate	1	GFSK
Enhanced data rate	2	P/4 DQPSK
Enhanced data rate	3	8DPSK (optional)

Table 24: Data rate schemes

Although the EDR uses new packets, link establishment and management are unchanged and still use Basic Rate packets.

10.2 Enhanced Data Rate ∏/4 DQPSK

4-state Differential Phase Shift Keying

2 bits determine phase shift between consecutive symbols

2 bits determine phase shift between consecutive symbols

∏/4 rotation avoids phase shift of ∏, which would cause large amplitude variation

Raised Cosine pulse shaping filter to further reduce side band emissions

Bit pattern	Phase shift
00	Π/4
01	3 Π/4
10	–3 Π/4
11	– Π/4

Table 25: 2 bits determine phase shift between consecutive symbols

10.3 8DQPSK

8-state Differential Phase-Shift Keying

Three bits determine phase shift between consecutive symbols.

Bit pattern	Phase shift
000	0
001	Π/4
011	Π/2
010	3 Π/4
110	Π
111	–3 Π/4
101	– Π/2
100	– Π/4

Table 26: 3 bits determine phase shift between consecutive symbols

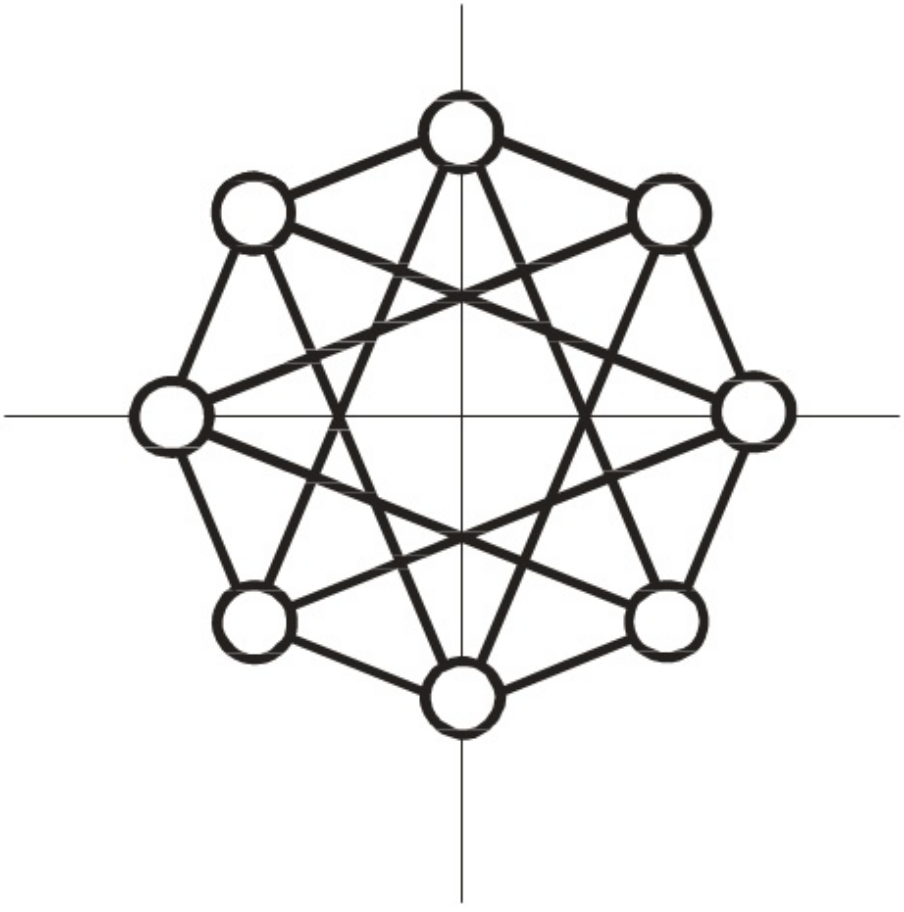

Figure 37: 8DQPSK

11 Layout and Soldering Considerations

11.1 Soldering Recommendations

WT32 is compatible with industrial standard reflow profile for Pb-free solders. The reflow profile used is dependent on the thermal mass of the entire populated PCB, heat transfer efficiency of the oven and particular type of solder paste used. Consult the datasheet of particular solder paste for profile configurations.

Bluegiga Technologies will give following recommendations for soldering the module to ensure reliable solder joint and operation of the module after soldering. Since the profile used is process and layout dependent, the optimum profile should be studied case by case. Thus following recommendation should be taken as a starting point guide.

- Refer to technical documentations of particular solder paste for profile configurations
- Avoid using more than one flow.
- Reliability of the solder joint and self-alignment of the component are dependent on the solder volume. Minimum of 150μm stencil thickness is recommended.
- Aperture size of the stencil should be 1:1 with the pad size.

A low residue, “no clean” solder paste should be used due to low mounted height of the component

11.2 Layout Guidelines

11.2.1 Audio Layout

Route audio lines as differential pairs. The positive and negative signals should run parallel and close to each other until they are converted to single-ended signals. Use dedicated audio ground plane for entire audio section.

11.2.2 Antenna Design

Do not place GND plane or any metal directly under the chip antenna of WT32. To avoid any excess parasitic capacitance in the antenna feed line caused by the RF test pin on the bottom side of the module, the area underneath the RF test pin should also be left free from copper. The chip antenna of WT32 requires GND planes as shown in the figure 39. The module should not be placed closer than 7 mm from a PCB corner and the module should be placed to an edge of the PCB. Any metal in close proximity of the antenna will have an effect on the antenna performance. Thus any metal should be placed as far from the antenna as possible. The antenna of WT32 is high dielectric chip antenna and any surrounding dielectric material has only minor effect (< 20 MHz) on the resonant frequency.

Avoid placing vias or any bare copper under the module. Since the module has several vias on the bottom side, any via or bare copper under the module can cause a short circuit. Vias under the module are shown in the figure 40.

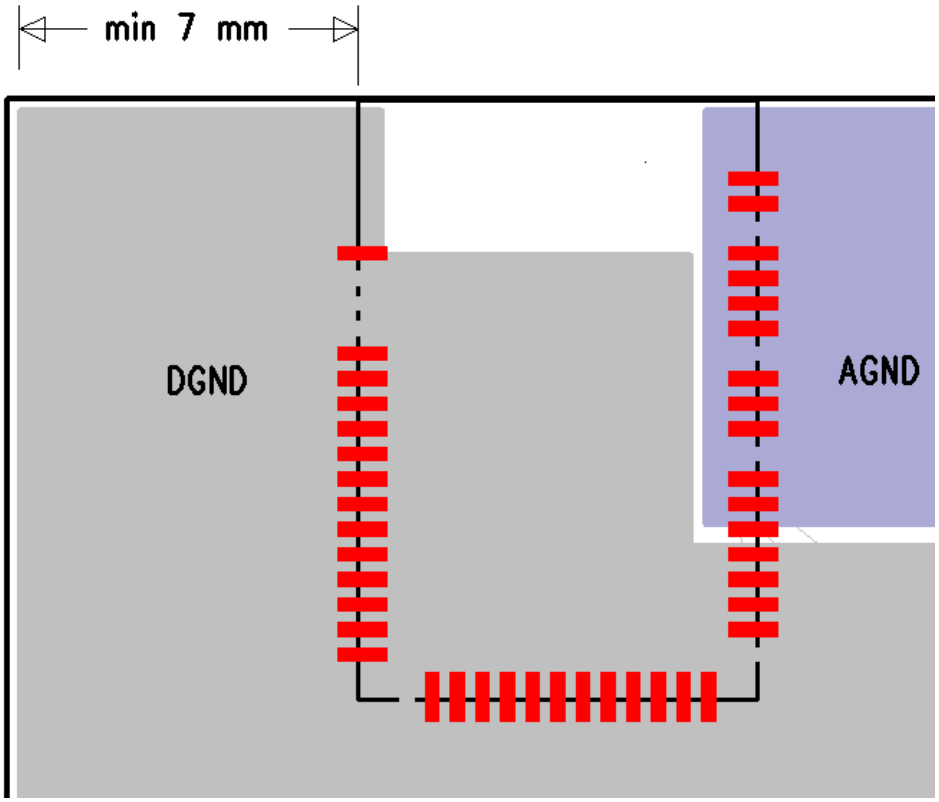

Figure 38: Recommended layout for the ground planes around the module.

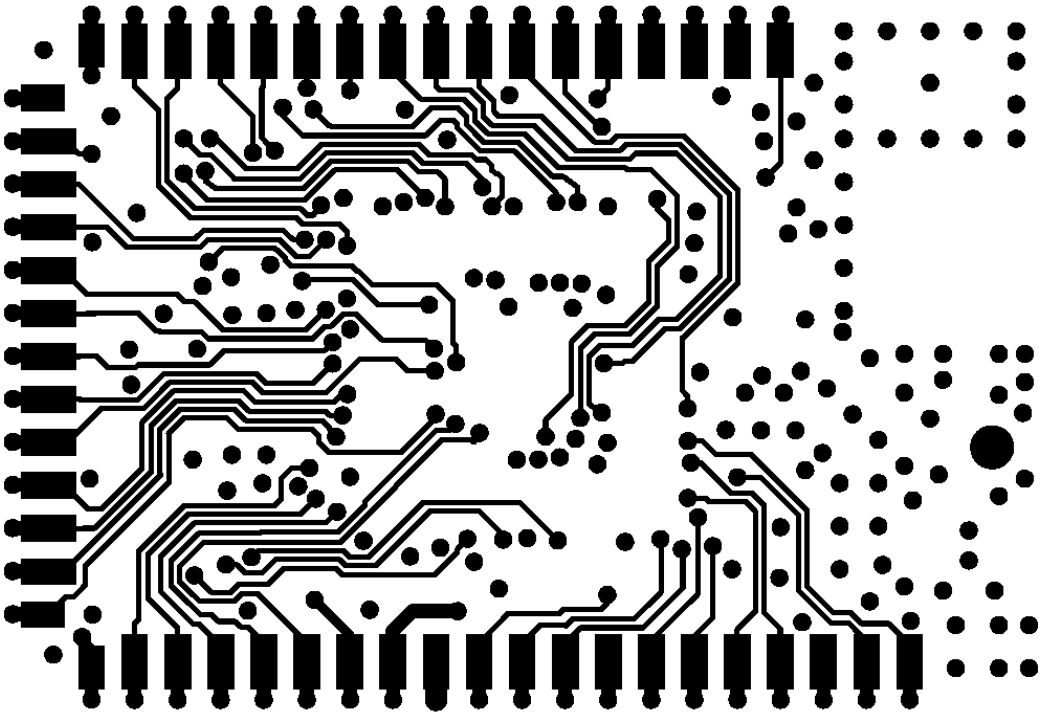

Figure 39: Bottom side layout of the module. Any via in the module can cause a short if placed directly above bare copper on a PCB.

12 WT32 Physical Dimensions

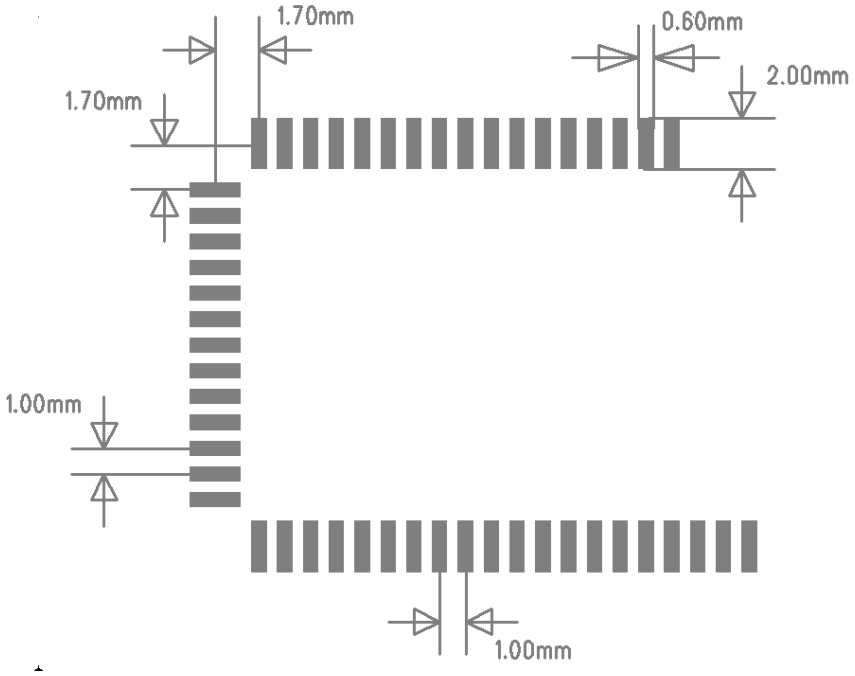

Figure 40: Recommended PCB land pattern

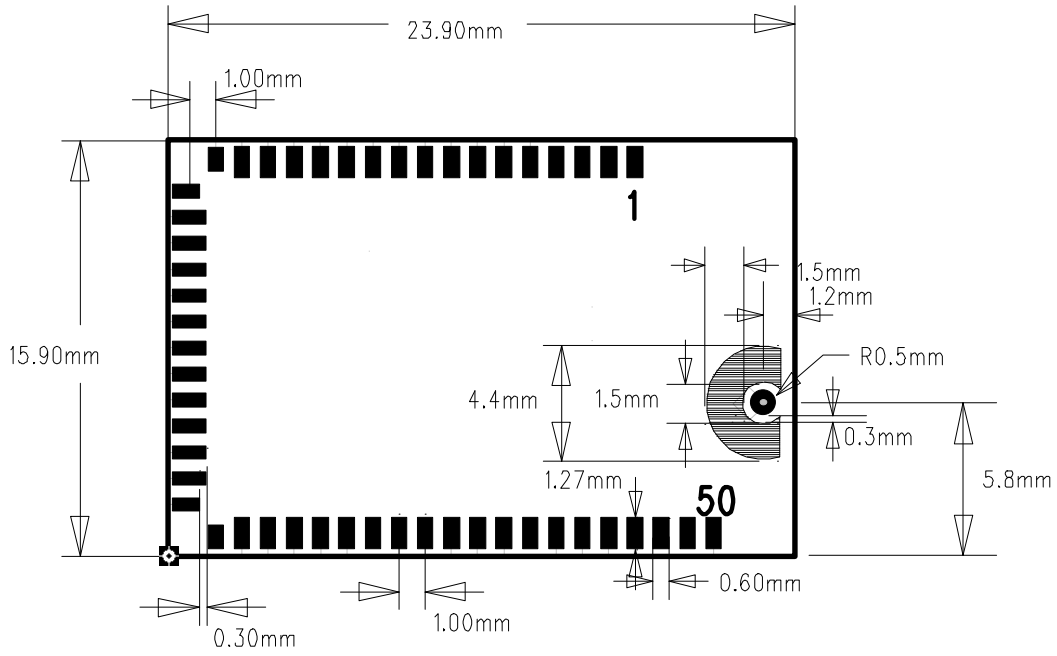

Figure 41: WT32 footprint

13 Package

Carrier Tape Appearance and Dimensions

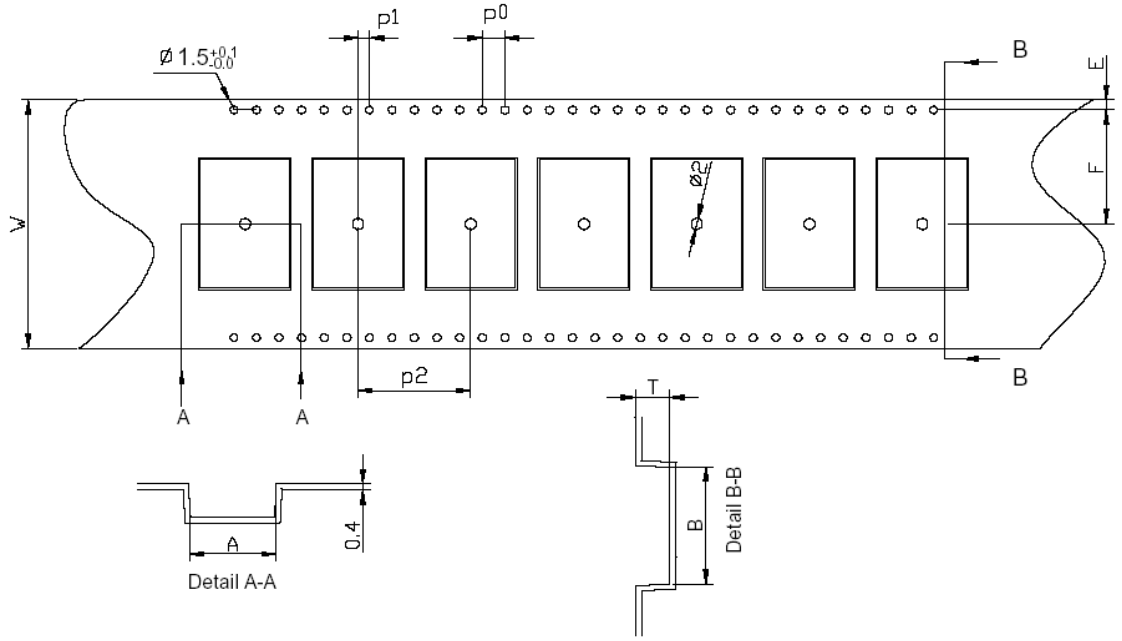

	A	B	W	F	E	P0	P1	P2	T
• •• •••••••	16.4	24.4	44	20.2	1.75	4.0	2.0	20	2.8
• ••••••••	±0.1	±0.1	±0.3	±0.1	+0.1	±0.1	±0.1	±0.1	±0.1

NOTES:

1.10 sprocket hole pitch cumulative tolerance ±0.2mm.

2.carrier camber not to exceed 1mm in 100mm

3.A and B measured on a plane 0.3mm above the bottom of the pocket

4.T measure form 0 plane on the inside bottom of the pocket to the top surface of the carrier

5.All dimensions meet EIA-481-C requirments.

6.material: black Anti-static Polysyrene

7.Tesistivity 10^{5}~10^{11}/square

Figure 42: Carrier tape appearance and dimensions

Reel Appearance and Dimensions

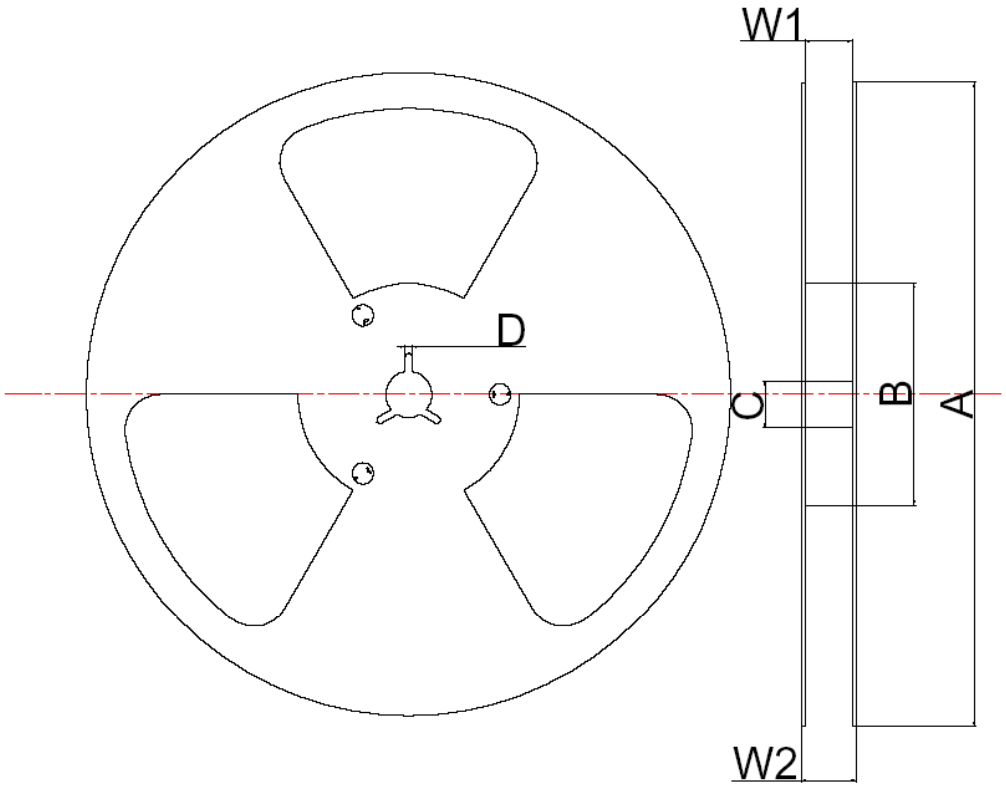

Location	A	B	C	D	W1	W2
Dimensions	330	20.2	13.0	2.2	40.5	49.1
Tolerance	±0.5	±1	±0.2	±0.5	±0.1	±0.2

NOTES:
1. MATERIAL:HIPS,ANT-STATIC 10^{5}~10^{11} OHM/SQ.
2.COLOR:BLUE

Figure 43: Reel appearance and dimensions

14 Certifications

WT32 is compliant to the following specifications.

14.1 Bluetooth

WT32 module is *Bluetooth* qualified and listed as an end product. If not modified in any way, it is a complete *Bluetooth* entity, containing software and hardware functionality as well as the whole RF-part including the antenna. This practically translates to that if the module is used without modification of any kind, it does not need any *Bluetooth* approval work. If changes are made in the parameter set, added profiles or in the antenna design, it is required to be submitted to a BQB (*Bluetooth* Qualification Body) for evaluation on what needs to be tested.

With HCI firmware WT32 will not meet the requirements of end product qualification.

WT32 is Bluetooth compliant to the following specifications

RF as defined in Part A of the Bluetooth specification v2.0+EDR, Vol.2 Core System Package [Controller volume] (Class 1 operation) with all optional and mandatory features supported.

BB as defined in Part B of the Bluetooth specification v2.0+EDR, Vol.2 Core System Package [Controller volume], and specified in the covered functionality of the Software Integrated Component (Bluetooth ID: B012319)

LM as defined in Part C of the Bluetooth specification v2.0+EDR, Vol.2 Core System Package [Controller volume], and specified in the covered functionality of the Software Integrated Component (Bluetooth ID: B012319)

L2CAP as defined in Part A of the Bluetooth specification v2.0+EDR, Vol.3 Core System Package [Controller volume], and specified in the covered functionality of the Software Integrated Component (Bluetooth ID: B012319)

SDP as defined in Part B of the Bluetooth specification v2.0+EDR, Vol.3 Core System Package [Controller volume], and specified in the covered functionality of the Software Integrated Component (Bluetooth ID: B012319)

RFCOMM as defined in PART F:1 of the Bluetooth Core Specification v1.1 and specified in the covered functionality of the Software Integrated Component (Bluetooth ID: B012319).

Generic Access GAP as defined in PART C of the Bluetooth Core Specification v2.0+EDR, Vol.3 Core Systems Package [Host Volume], and specified in the covered functionality of the Software Integrated Component (Bluetooth ID: B012319).

Serial Port Profile (SPP) as defined in PART K:5 of the Bluetooth Profile Specification v1.1, and specified in the covered functionality of the Software Integrated Component (Bluetooth ID: B012319).

Bluetooth EL: https://www.bluetooth.org/tpg/EPL_Detail.cfm?ProductID=6102

Bluetooth QDID: **B014372**

14.2 FCC

Federal Communications Commission (FCC) Statement

15.21

You are cautioned that changes or modifications not expressly approved by the part responsible for compliance could void the user's authority to operate the equipment.

15.105(b)

This equipment has been tested and found to comply with the limits for a Class B digital device, pursuant to part 15 of the FCC rules. These limits are designed to provide reasonable protection against harmful interference in a residential installation. This equipment generates, uses and can radiate radio frequency energy and, if not installed and used in accordance with the instructions, may cause harmful interference to radio communications. However, there is no guarantee that interference will not occur in a particular installation. If this equipment does cause harmful interference to radio or television reception, which can be determined by turning the equipment off and on, the user is encouraged to try to correct the interference by one or more of the following measures:

- Reorient or relocate the receiving antenna.
- Increase the separation between the equipment and receiver.
- Connect the equipment into an outlet on a circuit different from that to which the receiver is connected.
- Consult the dealer or an experienced radio/TV technician for help.

Operation is subject to the following two conditions:

- This device may not cause interference and
- This device must accept any interference, including interference that may cause undesired operation of the device.

FCC RF Radiation Exposure Statement:

This equipment complies with FCC radiation exposure limits set forth for an uncontrolled environment. End users must follow the specific operating instructions for satisfying RF exposure compliance. This transmitter must not be co-located or operating in conjunction with any other antenna or transmitter.

Note: The end product shall has the words "*Contains Transmitter Module FCC ID: QOQWT32AE*"

WT32-A/EC ID: QOQWT32AE

14.3 CE

WT32 meets the requirements of the standards below and hence fulfills the requirements of EMC Directive 89/336/EEC as amended by Directives 92/31/EEC and 93/68/EEC within CE marking requirement.

- Electromagnetic emission EN 301 489-17 V.1.2.1
    - EN 55022:1998+A
    - EN 55022:2000+A3
    - EN 55022:2003 Class B
    - EN 61000-3-2:2001
    - EN 61000-3-3:1995 A1:2001
    - EN 61000-4-3:2002
    - EN 61000-4-4:1995 A1:2000
    - EN 61000-4-5:1995 A1:2000
    - EN 61000-4-6:1996 A1:2000
    - EN 61000-4-11:1994 A1:2000
- ETSI EN 300.328 V1.6.1:2004

14.4 Industry Canada (IC)

WT32 meets Industry Canada's procedural and specification requirements for certification.

Industry Canada ID: 5123A-BGTWT32AE

14.5 Pretested antennas

Item no.	Model/Type	
Antenna1.	Antenna Type	Dipole Antenna
	Manufacture:	EAD
	Model:	MMTX-EA-79A Bluetooth 2.4GHz SMA M
	Frequency Range:	2.4GHz~2.5GHz
	Antenna Gain:	2.05dBi
	Impedance	50 ohms
	VSWR	<2
	Radiation pattern	Omni
Antenna 2.	Antenna Type	Dipole Antenna
	Manufacture:	GiaAnt
	Model:	Titanis
	Frequency Range:	2.4GHz~2.5GHz
	Antenna Gain:	4.4dBi
	Impedance	50 ohms
	VSWR	<2
	Radiation pattern	Omni
Antenna 3.	Antenna Type	Dipole Antenna
	Manufacture:	EAD
	Model:	BT-Stubby
	Frequency Range:	2.4GHz
	Antenna Gain:	2.6dBi
	Impedance	50 ohms
	VSWR	<2
	Radiation pattern	Omni
Antenna 4.	Antenna Type	1/4 wavelength dipole
	Manufacture:	Kinsun Industries Inc.
	Model:	6610103081-000 2.4GHz Hish Gain Antenna
	Frequency Range:	2.4-2.5GHz
	Antenna Gain:	5.0 dBi
	Impedance	50 ohms
	VSWR	≤ 2.0
	Radiation pattern	Omni

Item no.	Model/Type	
Antenna 5.	Antenna Type	Monopole Antenna
	Manufacture:	EAD
	Model:	MTX-BT-Blade
	Frequency Range:	2.45GHz and 5.2GHz
	Antenna Gain:	2dBi
	Impedance	50 ohms
	VSWR	<2
	Radiation pattern	Omni
Antenna 6.	Antenna Type	Chip Antenna
	Manufacture:	ACX
	Model:	AT3216
	Frequency Range:	2.4GHz~2.5GHz
	Antenna Gain:	0.5 dBi
	Impedance	50 ohms
	VSWR	<2
	Radiation pattern	Omni

15 RoHS Statement with a List of Banned Materials

WT32 meets the requirements of Directive 2002/95/EC of the European Parliament and of the Council on the Restriction of Hazardous Substance (RoHS)

The following banned substances are not present in WT32, which is compliant with RoHS:

- Cadmium
- Lead
- Mercury
- Hexavalent chromium
- PBB (Polybrominated Bi-Phenyl)
- PBDE (Polybrominated Diphenyl Ether)

16 Contact Information

Sales: sales@bluegiga.com

Technical support: support@bluegiga.com
http://www.bluegiga.com/techforum/

Orders: orders@bluegiga.com

Head Office / Finland:

Phone: +358-9-4355 060
Fax: +358-9-4355 0660

Street Address:

Sinikalliontie 5A
02630 ESPOO
FINLAND

Postal address:

P.O. BOX 120
02631 ESPOO
FINLAND

Sales Office / USA:

Phone: (781) 556-1039
Bluegiga Technologies, Inc.
99 Derby Street, Suite 200 Hingham, MA 02043